edexcel

GCSE (9-1) Design and Technology

Sample Assessment Materials

Pearson Edexcel Level 1/Level 2 GCSE (9-1) in Design and Technology (1DT0)

First teaching from September 2017

First certification from June 2019

Issue 1

Pearson

Edexcel, BTEC and LCCI qualifications

Edexcel, BTEC and LCCI qualifications are awarded by Pearson, the UK's largest awarding body offering academic and vocational qualifications that are globally recognised and benchmarked. For further information, please visit our qualification websites at www.edexcel.com, www.btec.co.uk or www.lcci.org.uk. Alternatively, you can get in touch with us using the details on our contact us page at qualifications.pearson.com/contactus

About Pearson

Pearson is the world's leading learning company, with 40,000 employees in more than 70 countries working to help people of all ages to make measurable progress in their lives through learning. We put the learner at the centre of everything we do, because wherever learning flourishes, so do people. Find out more about how we can help you and your learners at qualifications.pearson.com

Original origami artwork: Mark Bolitho
Origami photography: Pearson Education Ltd/Naki Kouyioumtzis

ISBN 978 1 4469 3300 8

Contents

Introduction

The Pearson Edexcel Level 1/Level 2 GCSE (9–1) in Design and Technology is designed for use in schools and colleges. It is part of a suite of GCSE qualifications offered by Pearson.

These sample assessment materials have been developed to support this qualification and will be used as the benchmark to develop the assessment students will take.

General marking guidance

- All candidates must receive the same treatment. Examiners must mark the last candidate in exactly the same way as they mark the first.
- Mark schemes should be applied positively. Candidates must be rewarded for what they have shown they can do rather than be penalised for omissions.
- Examiners should mark according to the mark scheme – not according to their perception of where the grade boundaries may lie.
- All the marks on the mark scheme are designed to be awarded. Examiners should always award full marks if deserved, i.e. if the answer matches the mark scheme. Examiners should also be prepared to award zero marks if the candidate's response is not worthy of credit according to the mark scheme.
- Where some judgement is required, mark schemes will provide the principles by which marks will be awarded and exemplification/indicative content will not be exhaustive. However different examples of responses will be provided at standardisation.
- When examiners are in doubt regarding the application of the mark scheme to a candidate's response, a senior examiner must be consulted before a mark is given.
- Crossed-out work should be marked **unless** the candidate has replaced it with an alternative response.

Marking guidance for levels based mark schemes

How to award marks

The indicative content provides examples of how students will meet each skill assessed in the question. The levels descriptors and indicative content reflect the relative weighting of each skill within each mark band.

Finding the right level

The first stage is to decide which level the answer should be placed in. To do this, use a 'best-fit' approach, deciding which level most closely describes the quality of the answer. Answers can display characteristics from more than one level, and where this happens markers must use the guidance below and their professional judgement to decide which level is most appropriate.

Placing a mark within a level

After a level has been decided on, the next stage is to decide on the mark within the level. The instructions below tell you how to reward responses within a level. However, where a level has specific guidance about how to place an answer within a level, always follow that guidance. Statements relating to the treatment of students who do not fully meet the requirements of the question are also shown in the indicative content section of each levels based mark scheme. These statements should be considered alongside the levels descriptors.

Markers should be prepared to use the full range of marks available in a level and not restrict marks to the middle. Markers should start at the middle of the level (or the upper-middle mark if there is an even number of marks) and then move the mark up or down to find the best mark. To do this, they should take into account how far the answer meets the requirements of the level:

- If it meets the requirements fully, markers should be prepared to award full marks within the level. The top mark in the level is used for answers that are as good as can realistically be expected within that level
- If it only barely meets the requirements of the level, markers should consider awarding marks at the bottom of the level. The bottom mark in the level is used for answers that are the weakest that can be expected within that level
- The middle marks of the level are used for answers that have a reasonable match to the descriptor. This might represent a balance between some characteristics of the level that are fully met and others that are only barely met.

Write your name here

Surname	Other names

Pearson Edexcel
Level 1/Level 2 GCSE (9–1)

Centre Number | Candidate Number

Design and Technology

Component 1

Sample assessment material for first teaching
September 2017
Time: 1 hour 45 minutes

Paper Reference
1DT0/1A

You must have:
a calculator
a ruler

Total Marks

Instructions

- Use **black** ink or ball-point pen.
- **Fill in the boxes** at the top of this page with your name, centre number and candidate number.
- Answer **all** questions.
- Answer the questions in the spaces provided – *there may be more space than you need.*
- Any diagrams may NOT be accurately drawn, unless otherwise indicated.
- You must **show all your working out** with **your answer clearly identified** at the **end of your solution**.

Information

- The total mark for this paper is 100.
- The marks for **each** question are shown in brackets – *use this as a guide as to how much time to spend on each question.*

Advice

- Read each question carefully before you start to answer it.
- Try to answer every question.
- Check your answers if you have time at the end.

Turn over

S55249A

1/1/1

S 5 5 2 4 9 A 0 1 2 8

Pearson

SECTION A – CORE

Answer ALL questions. Write your answers in the spaces provided.

1 The materials that products are made from are chosen because of their characteristics.

(a) Figure 1 shows a table of products.

For each of the products shown, give a property of the material it is made from that makes the material suitable for the product.

The first one has been done for you.

Picture of product	Description of product	Property
 (Source: © Feng Yu/Shutterstock)	A polystyrene coffee cup	Good insulator of heat
 (Source: © 3DMAVR/Shutterstock)	A balsawood toy boat	(1) (i) .....
 (Source: © Anteromite/Shutterstock)	An aluminium paint tube	(1) (ii) .....
 (Source: © Morphart Creation/Shutterstock)	An acrylic bath	(1) (iii) .....

Picture of product	Description of product	Property
 (Source: © Borislav Bajkic/Shutterstock)	A fleece hat	**(1)** (iv) .....

Figure 1

(b) Figure 2 shows a coffee cup.

The manufacturers of the cup want to improve it by using temperature-responsive polymers.

(Source: © Feng Yu/Shutterstock)

Figure 2

Explain how temperature-responsive polymers could be used to improve the coffee cup.

(2)

.....

.....

.....

.....

(c) Figure 3 shows a cardboard sleeve around a coffee cup.

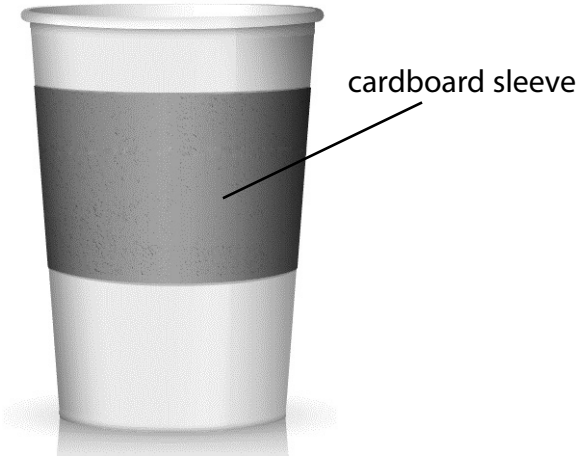

(Source: © Walking-onstreet/Shutterstock)

Figure 3

The sleeve is manufactured from corrugated cardboard.

Use notes and/or sketches to show the construction of corrugated cardboard.

You will be marked on how you apply your understanding of design and technology, not your graphical skills.

(2)

(Total for Question 1 = 8 marks)

2 Figure 4 shows an MDF square.

The MDF square will be covered with fabric to make a wall clock.

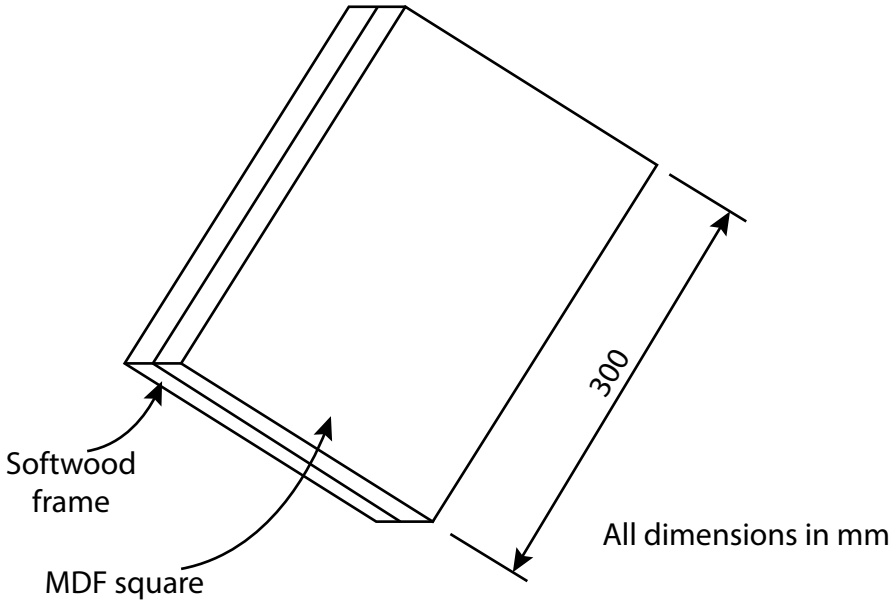

Figure 4

(a) Explain **one** benefit for the environment of using MDF rather than pine to make the wall clock.

(2)

.....

.....

.....

.....

(b) MDF is available in 61 cm × 122 cm sheets.

Calculate how many 300 mm × 300 mm squares can be cut from the available sheet.

(3)

.....

(c) The clock face is covered with a blended fibre fabric.

Explain **one** advantage of blending fibres to make fabrics.

(2)

.....

.....

.....

.....

(d) Figure 5 shows a clock mechanism.

(Source: www.clockparts.co.uk)

Figure 5

Explain **one** benefit to the clock manufacturer of buying the clock mechanisms as standard components.

(2)

.....

.....

.....

.....

(Total for Question 2 = 9 marks)

3 Levers are classified as class 1, 2 or 3.

(a) Figure 6 shows two different products, both are types of lever.

F is the fulcrum, E is the effort and L is the load.

For each of the products shown, name the type of lever.

Product	Type of lever
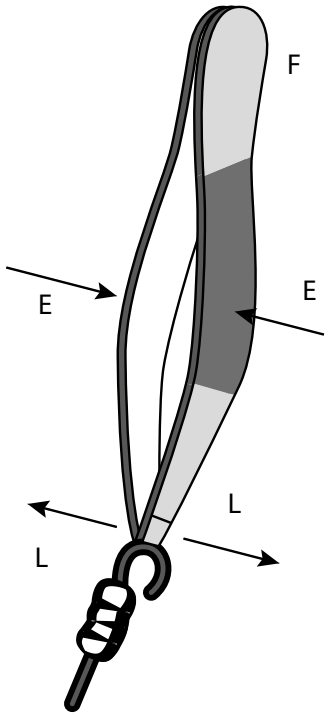 Tweezers	**(1)** (i) .....
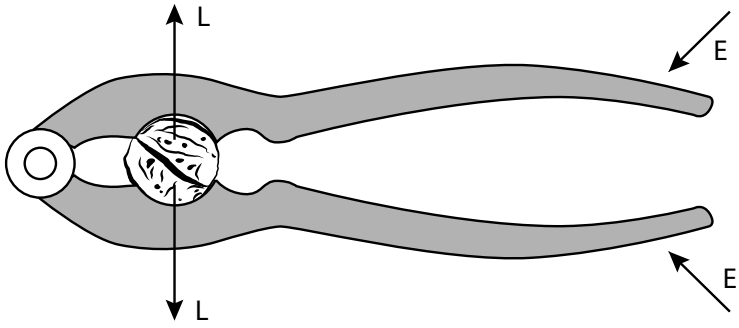 Nutcracker	**(1)** (ii) .....

Figure 6

(b) Figure 7 shows a loaded wheelbarrow.

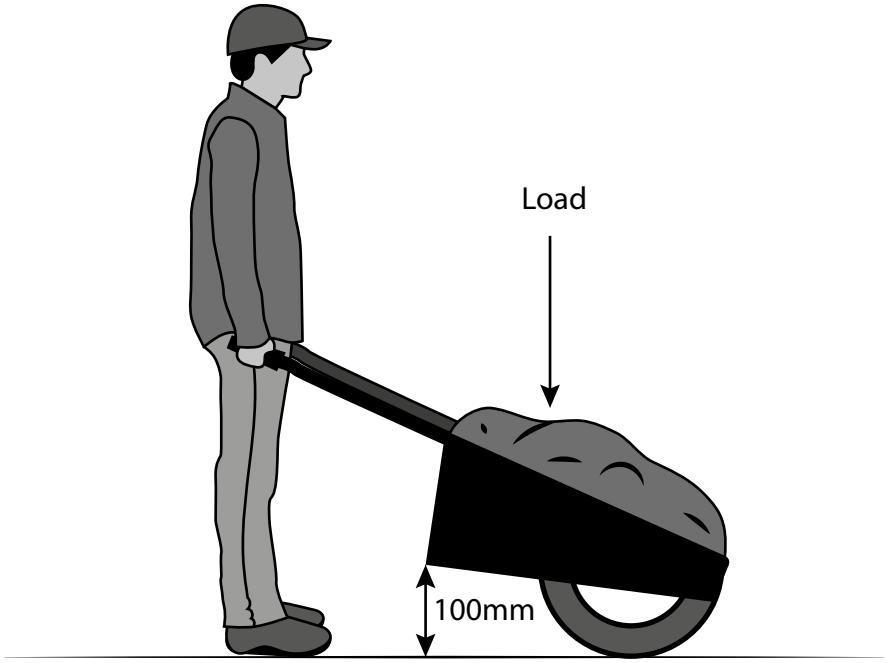

Figure 7

Mechanical advantage (MA) is calculated by:

$$MA = \frac{\text{load}}{\text{effort}}$$

The velocity ratio (VR) is 4 and the effort is 100 N.

The efficiency of the system is given by:

$$\text{Efficiency} = \frac{MA}{VR} \times 100\%$$

The system is 85% efficient.

Calculate the maximum load that can be lifted.

(3)

..... N

(c) Explain **one** reason why the length of the handles on the wheelbarrow would be increased.

(2)

.....

.....

.....

.....

(d) Explain **two** benefits that just-in-time (JIT) manufacturing could have for the manufacturer of the wheelbarrow.

(4)

1 .....

.....

.....

2 .....

.....

.....

(Total for Question 3 = 11 marks)

4 Figure 8 shows a gate.

The gate is moved by an electric motor in combination with a rack and pinion mechanism.

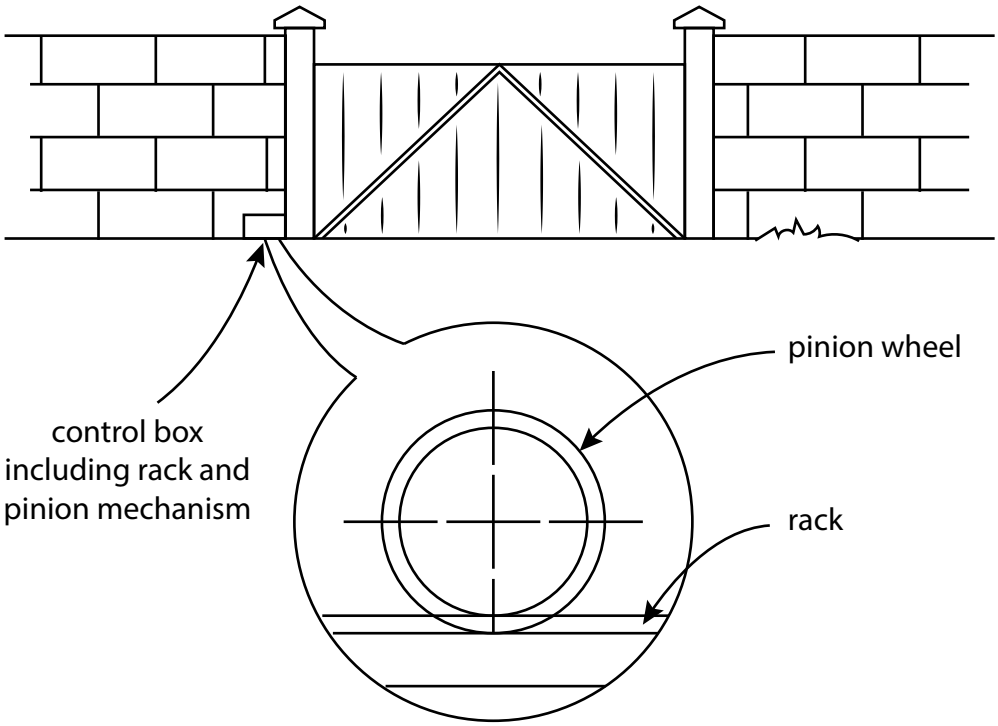

Figure 8

(a) Give **one** other application of a rack and pinion mechanism.

(1)

.....

(b) The gate needs to move 3 m to open fully.

The pinion wheel has a radius of 60 mm.

Calculate the number of revolutions the pinion wheel must rotate in order to open the gate fully.

Give your answer to the nearest whole number.

(4)

Use $\pi = 3.142$

Formula for circumference = πd

.....

(c) Figure 9 shows a graph of the approximate number of people employed in solar-power-related industries between 2012 and 2016.

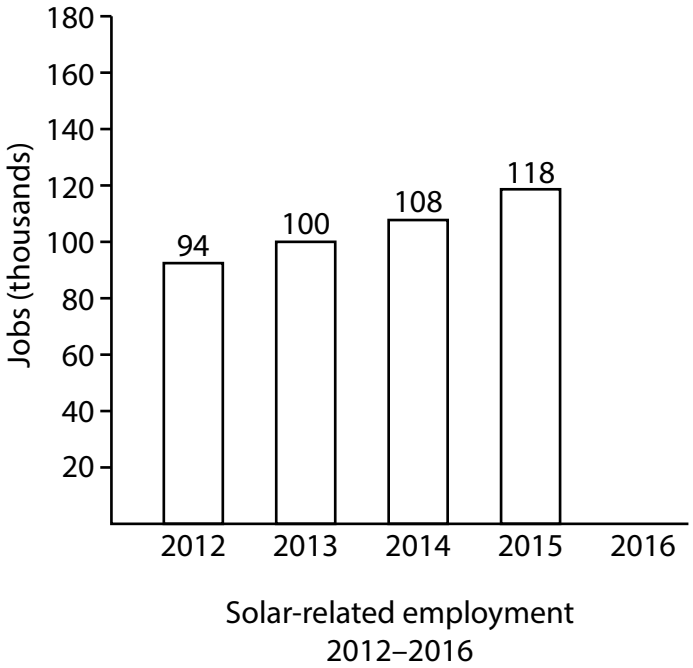

Figure 9

Analyse the graph.

Calculate the expected increase in the number of people employed in solar-power related industries in 2016, based on the current trend.

(1)

increase = ...

(d) The manufacturer considered two different power supplies to power the electric gates.

Figure 10 shows data for these power supplies.

Factor	Solar	Mains electricity
Storage method	Battery	None required on National Grid
Upfront costs	£6000	Nil
Cost per kwh	Nil	9.596 pence
Annual standing charge	Nil	£116

Figure 10

Analyse the data provided.

Discuss the issues that the manufacturer would need to consider when making the decision about which power supply to choose.

(6)

.....

.....

.....

.....

.....

.....

.....

.....

.....

.....

.....

.....

(Total for Question 4 = 12 marks)

TOTAL FOR SECTION A = 40 MARKS

SECTION B – METALS

Answer ALL questions. Write your answers in the spaces provided.

5 Figure 11 shows a design solution and some additional information for a games-controller storage station.

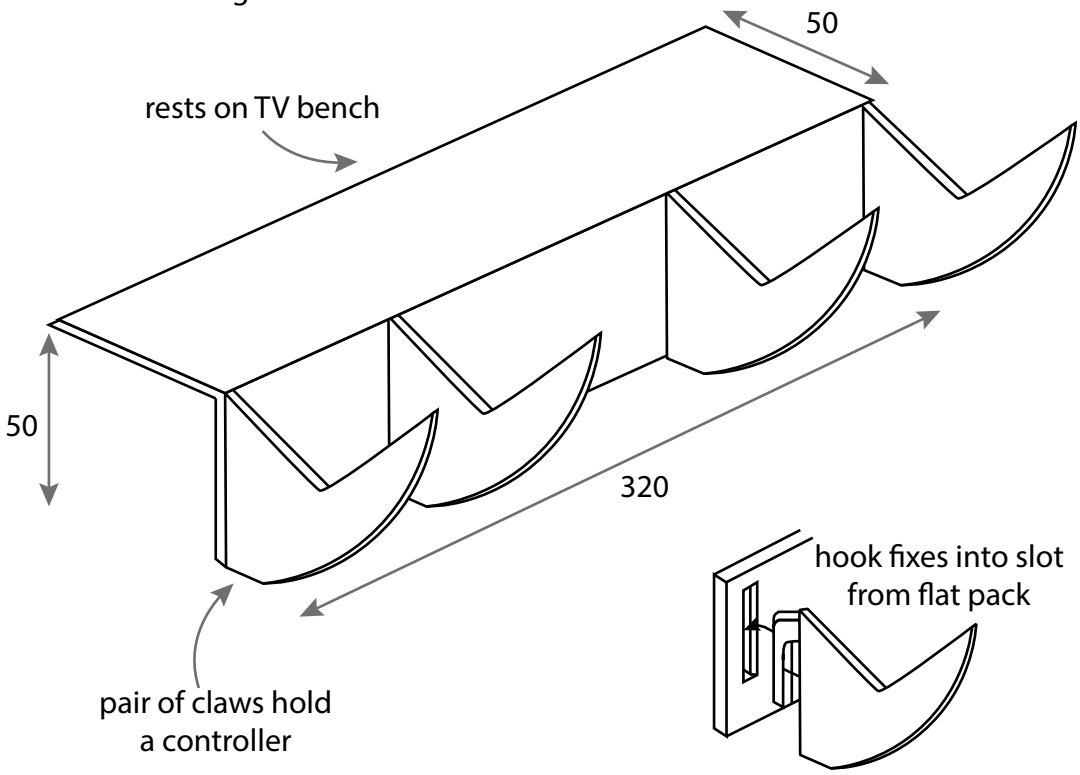

Additional information

Dimensions for game case

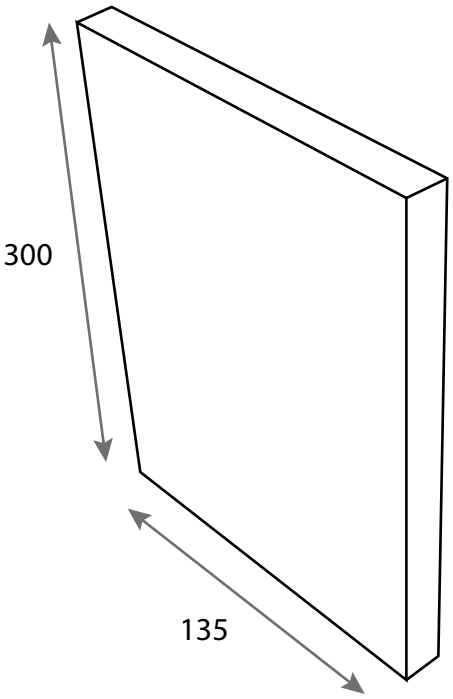

Dimensions for the controller

55 mm thick

All dimensions are in millimetres.

Figure 11

(a) The games-controller storage station needs to be improved to include the following specification points.

The games-controller storage station must:

- clip on to the front of a TV unit securely
- hold a computer-game case that can be easily removed
- enclose the storage station to protect it from dust.

Use notes and/or sketches to show how the games-controller storage station could be modified to include these three specification points.

You will be marked on how you apply your understanding of design and technology, not your graphical skills.

Use the outline of the original design solution to show your modifications.

(6)

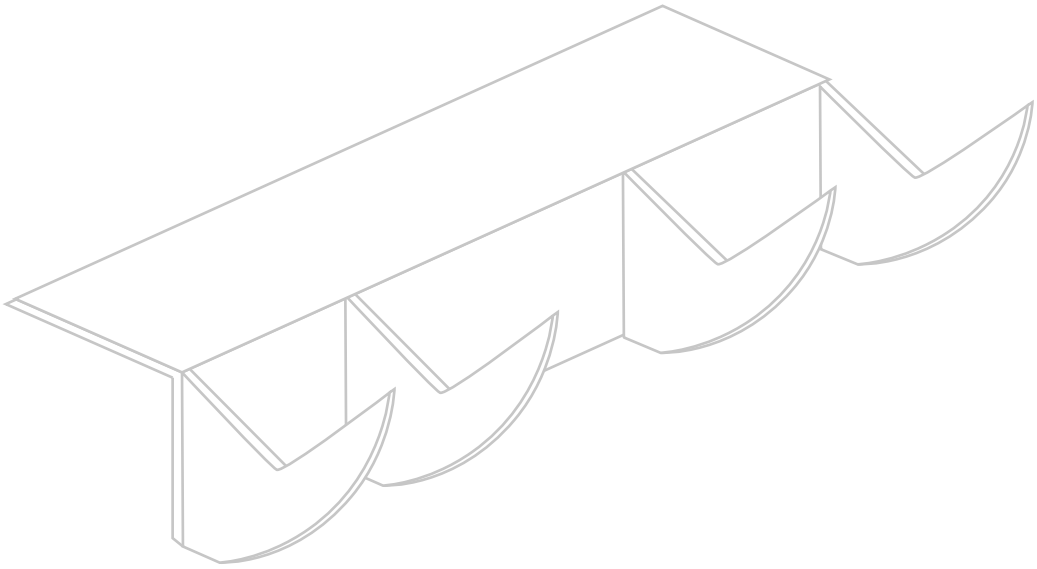

(b) Figure 12 shows a games-console storage station.

The games-console storage station must be stable.

(Source: cigardownloadersuperv7.cv/games-consoles-storage-units-download.free.html)

Figure 12

Analyse the games-console storage station.

Explain **two** ways in which the games-console storage station meets or fails to meet the criteria of being stable.

(4)

1 .....

.....

.....

.....

2 .....

.....

.....

.....

(Total for Question 5 = 10 marks)

6 Figure 13 shows a multi-tool.

The multi-tool includes a range of different tools, including a bottle opener, corkscrew and blade.

The multi-tool is made as a one-off prototype from mild steel.

(Source: © Michał Strzelecki/iStock)

Figure 13

(a) (i) Explain **one** reason why a piercing saw would be used in the manufacture of the multi-tool.

(2)

.....

.....

.....

.....

(ii) Explain **one** reason why a file would be used in the manufacture of the multi-tool.

(2)

.....

.....

.....

.....

(b) Figure 14 shows the bottle opener tool.

The bottle opener is hardened.

Figure 14

Use notes and/or sketches to show the process of hardening and tempering the bottle opener.

You will be marked on how you apply your understanding of design and technology, not your graphical skills.

(4)

(c) Figure 15 shows the multi-tool casing handle.

The casing handle is shaped.

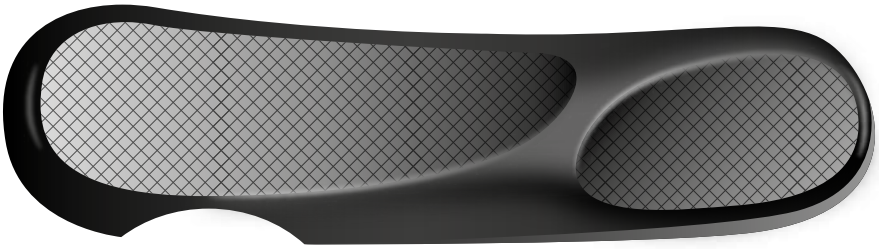

Figure 15

Explain **one** reason why the casing handle is shaped.

(2)

.....

.....

.....

.....

(d) The blanks for the blades in the multi-tool are going to be mass produced.

Name **two** methods that can be used to produce the blanks.

For each method, explain one advantage to the manufacturer of using this method.

(6)

Method 1

.....

Explanation

.....

.....

.....

.....

.....

Method 2

.....

Explanation

.....

.....

.....

.....

.....

(Total for Question 6 = 16 marks)

7 Figure 16 shows go-karts.

Go-karts are four-wheeled vehicles used for motorsport, fun and entertainment.

(Source: Agencja Fotograficzna Caro/Alamy Stock Photo and Travis VanDenBerg/Alamy Stock Photo)

Figure 16

(a) Give **one** method of increasing the strength of the frame of the go-kart.

(1)

.....

(b) The go-kart is manufactured using a 25 mm diameter mild steel tube, with a 2 mm wall thickness to make the main frame.

Explain **two** reasons for using tubular steel rather than steel bar.

(4)

1 .....

.....

.....

.....

2 .....

.....

.....

.....

(c) Figure 17 shows an aluminium sheet that is fitted over the front of the go-kart frame.

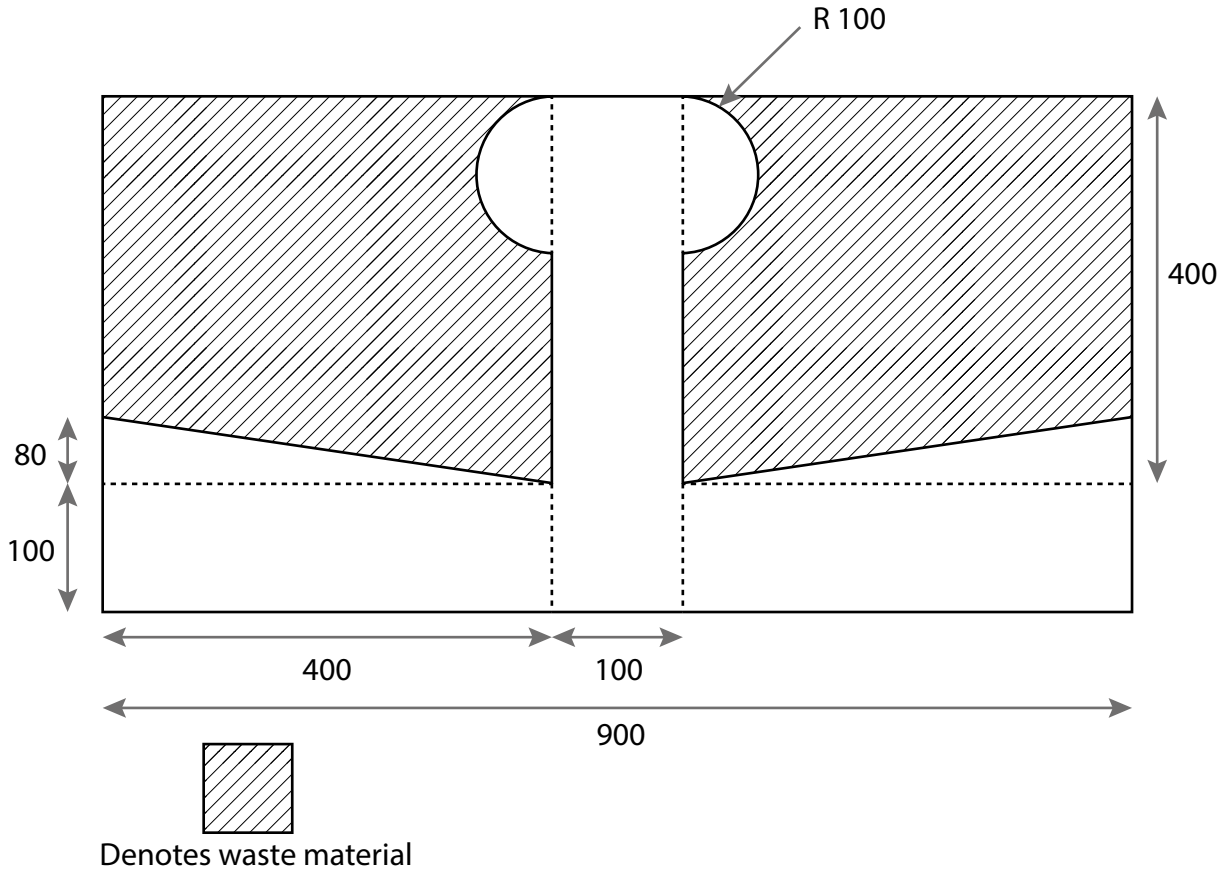

All measurements are in mm
R = radius

Figure 17

Calculate how much aluminium sheet is wasted from the whole piece, in cm².

Give your answer to 2 decimal places.

Area of a circle = $\pi \times r^2$

Area of a triangle = ½ × base × height

Use $\pi = 3.142$

(5)

..... cm²

(d) Explain **two** reasons why titanium is an appropriate choice of material for manufacturing the frame of the go-kart.

(6)

1 .....

.....

.....

.....

.....

.....

2 .....

.....

.....

.....

.....

(Total for Question 7 = 16 marks)

8 Figure 18 shows a desk lamp.

(Source: © Maksym Bondarchuk/iStock)

Figure 18

(a) (i) Explain **one** reason why a painted finish was applied to the desk lamp.

(2)

.....

.....

.....

.....

(ii) The desk lamp is made from aluminium.

Explain **one** working property of aluminium that makes it suitable for the desk lamp.

(3)

.....

.....

.....

.....

.....

.....

(b) Figure 19 shows two springs used on the desk lamp.

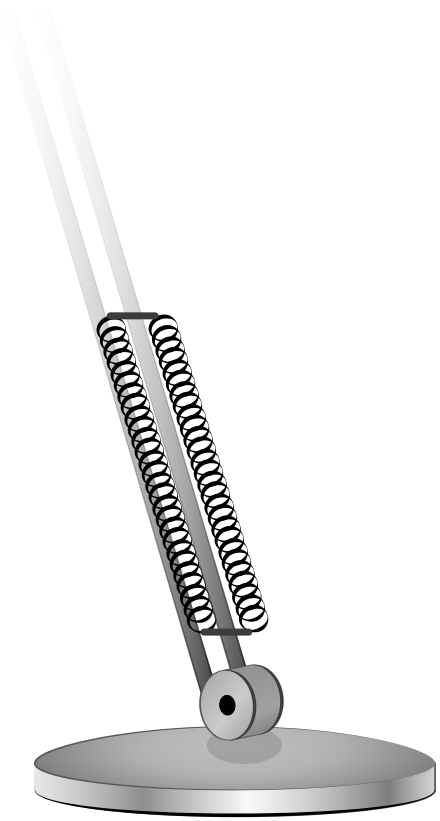

Figure 19

Explain **two** quality-control checks that would be carried out on the functionality of the springs during the manufacturing process.

(4)

1 .....

.....

.....

.....

2 .....

.....

.....

.....

(c) A multinational company produces desk lamps to be sold in the UK.

Figure 20 shows information about the desk lamp.

Raw material	Bauxite
Material	Aluminium
Source of material	USA
Manufactured in	Taiwan
Power source	220–240 V AC
Wattage	40W

Figure 20

Analyse the information in Figure 20.

Evaluate the desk lamp with reference to its ecological footprint.

(9)

.....

.....

.....

(Total for Question 8 = 18 marks)

TOTAL FOR SECTION B = 60 MARKS
TOTAL FOR PAPER = 100 MARKS

Component 1 mark scheme – 1DT0/1A

Section A – Core content

Question number	Answer	Mark
1(a)(i)	Any **one** property from: • lightweight (1) • soft (1) • low density (1).	**(1)**

Question number	Answer	Mark
1(a)(ii)	Any **one** property from: • ductile (1) • malleable (1) • non-corrosive/will not rust (1) • non-reactive with paint (1).	**(1)**

Question number	Answer	Mark
1(a)(iii)	Any **one** property from: • waterproof (1) • plasticity (1) • electrical insulator (1).	**(1)**

Question number	Answer	Mark
1(a)(iv)	Any **one** property from: • lightweight (1) • soft (1) • good water resistance/hydrophobic (1) • good insulator of heat (1)	**(1)**

Question number	Answer	Additional guidance	Mark
1(b)	Any **one** explanation that includes a method of use (1) and a linked justification of that use (1). • The temperature-responsive polymers could give an indication of when it is safe to drink (1) as they will change colour when hot/cool (1). • The temperature-responsive polymers can be used as an aesthetic feature (1), as any logos/images will change colour when hot/cool (1).	Do not award a single mark for simply saying 'they could be used'.	**(2)**

Question number	Answer	Mark
1(c)	**Marks will be awarded for understanding of design and technology, not graphical skills.** Notes and/or sketches that include: • flat linerboard/outer/inner surface (1) • fluted corrugated sheet (1). Example of candidate response: 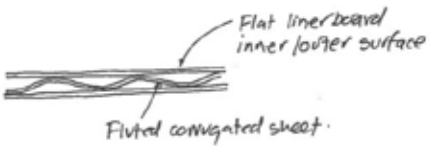	**(2)**

Question number	Answer	Mark
2(a)	Any **one** explanation that includes a benefit (1) and a linked justification of that benefit (1). • MDF is made from waste material (1), therefore the waste will not need to go to landfill/be dumped (1). • Using MDF will reduce the amount of natural timber being consumed/cut down (1), therefore pine as a natural resource will last longer/be put to better use (1).	**(2)**

Question number	Answer	Additional guidance	Mark
2(b)	A calculation that includes: • conversion of units (1) • correct number of whole pieces by dimension (1) • correct sum (1). 300 mm = 30 cm (1) $\frac{61}{30}$ = 2 whole cuts $\frac{122}{30}$ = 4 whole cuts (1) 2 × 4 = 8 whole cuts (1)	Award full marks for correct numerical answer without working. Allow ecf if candidate gets part of calculation wrong.	**(3)**

Question number	Answer	Mark
2(c)	Any **one** explanation that includes an advantage (1) and a linked justification of that advantage (1). • Blended fibres combine the properties of the original fibres (1), therefore the properties can be improved/enhanced (1). • Combing/blending fibres allows cheaper fibres to be incorporated (1), therefore the overall cost of the fabric will be reduced (1). • The appearance/performance of the fabric can be improved/enhanced (1), therefore it is more attractive/appealing to the end user (1). Do not accept cheap on its own, unless qualified.	**(2)**

Question number	Answer	Mark
2(d)	Any **one** explanation that includes a benefit (1) and a linked justification of that benefit (1). • They will/may not be able to make the clock mechanism themselves (1), therefore they do not need to invest in specialist machinery/training/workforce (1). • They will be made by a specialist (1), therefore they will come with a guarantee/ensure quality (1).	**(2)**

Question number	Answer	Mark
3(a)(i)	Type 3	**(1)**

Question number	Answer	Mark
3(a)(ii)	Type 2	**(1)**

Question number	Answer	Additional guidance	Mark
3(b)	A calculation that includes: • transposition of formula and calculation to show MA ÷ VR = 0.85 (1) • transposition of formula to show MA = 3.4 (1) • transposition of MA formula and calculation of load = 340 N (1). Efficiency = $\frac{MA}{VR} \times 100\%$ $\frac{MA}{VR} = 0.85$ (1) VR × 0.85 = MA VR = 4 MA = 4 × 0.85 = 3.4 (1) Effort = 100 MA = $\frac{load}{effort}$ 3.4 = $\frac{load}{100}$ load = 100 × 3.4 = 340 N (1)	Award full marks for correct numerical answer without working. Allow ecf if candidate gets part of calculation wrong.	**(3)**

Question number	Answer	Mark
3(c)	Any **one** explanation that includes a benefit (1) and a linked justification of that benefit (1). • This will increase the mechanical advantage (1), therefore making it easier to lift the wheelbarrow (1). • A greater load/weight can be lifted (1) because there is greater leverage (1).	**(2)**

Question number	Answer	Mark
3(d)	Any **two** explanations that include a benefit (1) and a linked justification of that benefit (1). • They will have much less material in stock (1), therefore they have less money tied up/invested in materials they are not using (1). • They do not have to employ staff on permanent contracts (1), therefore they can employ staff as and when required, reducing the wage bill (1). • Once the wheelbarrows have been manufactured they are shipped out (1), therefore no expensive storage/warehouse required.	**(4)**

Question number	Answer	Mark
4(a)	Any **one** application from: • steering mechanism (1) • slush/lock gate (1) • pillar drilling machine (1) • lathe bed/saddle slide (1).	**(1)**

Question number	Answer	Additional guidance	Mark
4(b)	A calculation that includes: • calculation of circumference (1) • conversion of units: 3 m to 3000 mm (1) • correct sum = 7.96 (1) • 8 whole turns (1). $C = \pi d$ = 3.142 × 120 = 377.04 mm (1) 3 m = 3000 mm (1) $\frac{3000}{377.04} = 7.96$ (1) = 8 whole turns (1)	Award full marks for correct numerical answer without working. Allow ecf if candidate gets part of calculation wrong.	**(4)**

Question number	Answer	Mark
4(c)	12/12 thousand/12 000	**(1)**

Question number	Indicative content	Mark
4(d)	**AO3 (6 marks)** • Solar power is expensive to set up. • Solar power is free once installed. • Limited by sunlight hours. • Batteries lose ability to charge/recharge over time. • Mains power incurs a flat fee every year even if you do not use it. • Every time you open/close the gates it will cost you money if using mains power. • Power lines can be blown down in the wind, which means you cannot operate the gate in a power cut, therefore you may be shut in/out of your house. • Installing power lines is very expensive in remote areas, which means it might be prohibitively expensive to install them, therefore making solar power a more viable option. • If the solar exposure is low the batteries might not charge up enough, which means there might not be sufficient power to open/close the gates. • The standing charge is a flat fee that has to be paid, which means if you are away for a long period of time and do not use the gates, you still have to pay the charge, which will be a waste of money.	**(6)**

Level	Mark	Descriptor
	0	No rewardable material.
Level 1	1–2	• Attempts to interrogate and deconstruct information but connections and logical chains of reasoning are flawed. • An unbalanced appraisal of the information/issues, containing judgements that show a limited awareness of the interrelationships between factors or competing arguments.
Level 2	3–4	• Interrogates and deconstructs information and provides some connections and logical chains of reasoning. • A balanced appraisal of the information/issues, containing judgements that show an awareness of the interrelationships between factors or competing arguments.
Level 3	5–6	• Interrogates and deconstructs information and provides sustained connections and logical chains of reasoning. • A well-balanced appraisal of the information/issues, containing judgements that show a thorough awareness of the interrelationships between factors or competing arguments.

Section B – Metals

Question number	Answer	Mark
5(a)	**Marks will be awarded for understanding of design and technology, not graphical skills.** Notes and/or sketches that include: • clipping on to the front of a TV unit (1) securely (1), e.g. clamping/pinching method to the table securely with grub screw/sliding clamp method/threaded bar Example of candidate response: 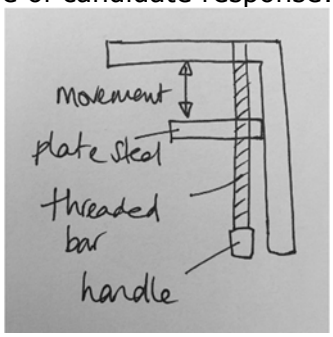 Annotated notes: movement, plate steel, threaded bar and handle labelled. • holding a computer-game case (1) that can be easily removed (1), e.g. space to hold and display on a computer-game shelf/slot and easily removed/no tools or equipment needed to remove the game case Example of candidate response: 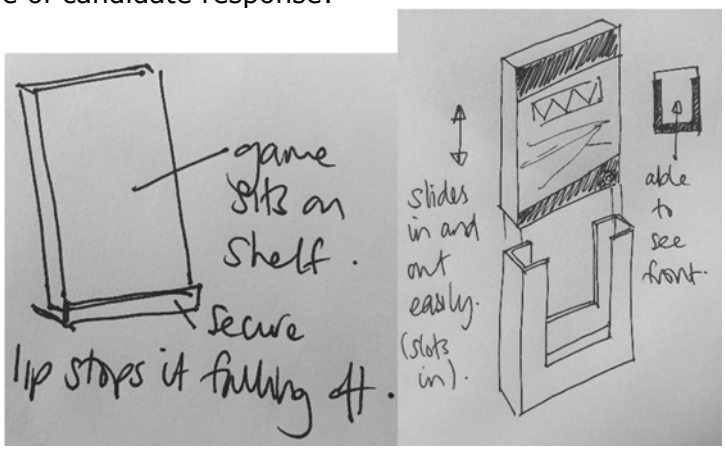 Annotated notes: game sits on shelf, secure lip stops it falling off. Slides in and out easily (slots in), able to see front. • enclosing the storage station (1) to protect it from dust (1), e.g. sheet material/skin to protect it from dust/ability to be airtight.	(6)

Question number	Answer	Mark
5(a) continued	Example of candidate response: 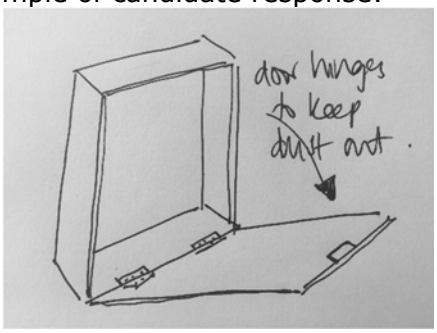 Annotated notes: door hinges to keep dust out.	

Question number	Answer	Mark
5(b)	Any **two** explanations that include a way (1) and a linked justification of that way (1). • The storage station has a wide base (1). This is good because it means that it will not be top heavy and so will not fall over (1). • The storage station is as tall as it is wide (1). This is good because it is sturdy and will not topple over (1).	**(4)**

Question number	Answer	Additional guidance	Mark
6(a)(i)	Any **one** explanation that includes a reason (1) and a linked justification of that reason (1). • The features have curves/shapes that can be cut with a piercing saw (1) because the blade has small, fine, hard teeth (1). • The piercing saw has small, fine, hard teeth (1) that allows it to cut easily through the mild steel (1).	'Features' could be blade, scissors, bottle opener, nail file etc.	**(2)**

Question number	Answer	Mark
6(a)(ii)	Any **one** explanation that includes a reason (1) and a linked justification of that reason (1). • To define/shape the different tools (1) before they are ground/finished (1). • To remove fine amounts of metal (1), therefore the different tools can be made to a precise size (1).	**(2)**

Question number	Answer	Additional guidance	Mark
6(b)	**Marks will be awarded for understanding of design and technology, not graphical skills.** Notes and/or sketches that include: • method of heating work (1) • plunged into case hardening compound (1) • reheat work (1) • rapid cooling (1). Example of candidate response: 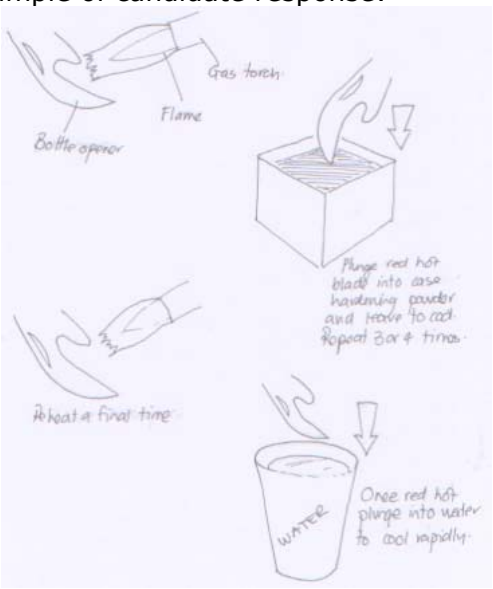 Annotated notes: 1 – Bottle opener, Flame, Gas torch. 2 – Plunge red hot blade into case hardening powder and leave to cool. Repeat 3 or 4 times. 3 – Reheat a final time. 4 – Once red hot plunge into water to cool rapidly.	Do not accept anything related to preparation for shaping the features of the bottle opener.	**(4)**

Question number	Answer	Mark
6(c)	Any **one** explanation that includes a reason (1) and a linked justification of that reason (1). • The handle fits the shape of the hand (1), therefore making it comfortable/easy to use (1). • The casing handle has ridges/texture moulded into it (1), therefore ensuring a firmer grip on the multi-tool (1). • The casing handle fits the shape of the hand (1), therefore making it comfortable/easy to use (1).	**(2)**

Question number	Answer	Mark
6(d)	Any **two** explanations that include a reason (1), plus **two** linked justifications of that reason (1) + (1). • The blanks could be stamped out (1), allowing for several blanks to be stamped at a time (1), which means that more could be made in a smaller amount of time (1). • The blanks could be laser cut (1), producing very accurate outputs (1), which does not require any additional edge finishing or shaping other than grinding/heat treatments (1).	**(6)**

Question number	Answer	Mark
7(a)	Any **one** method from: • gusset welded at the corner (1) • fish plates welded at the corner (1).	**(1)**

Question number	Answer	Mark
7(b)	Any **two** explanations that include a reason (1) and a linked justification of that reason (1). • Tubular steel has a better strength to weight ratio (1), therefore it makes the go-kart lighter (1). • It is easier to join tubular steel together (1), therefore manufacture is less complex (1). • Tubular steel is easier to bend (1) because it is hollow (1).	**(4)**

Question number	Answer	Additional guidance	Mark
7(c)	A calculation that includes: • conversion of units from mm to cm before further calculations • calculation of total area = 4500 cm^2 (1) • calculation of area used: area of the rectangles = 1300 cm^2 (1) area of triangles = 320 cm^2 (1) area equivalent to 1 full circle = 314.2 cm^2 (1) • total area wasted given to 2 d.p.: total area − total area used = 2565.80 (cm^2) (1).	Do not award the final mark if the answer is still in mm^2. Award full marks for correct numerical answer without working. Allow ecf if candidate gets part of calculation wrong.	**(5)**

Question number	Answer	Mark
7(d)	Any **two** explanations that include a reason (1), plus **two** linked justifications of that reason (1) + (1). • Titanium is tough (1) and able to deform without fracturing (1), therefore it will be less likely to break in a collision (1). • Titanium is malleable (1) and can be deformed without losing toughness (1), therefore the frame can be shaped easily (1). • Titanium oxidises quickly (1), which gives it a high resistance to corrosion (1), therefore the go-kart will not corrode when used in outdoor conditions (1).	**(6)**

Question number	Answer	Mark
8(a)(i)	Any **one** explanation that includes an advantage (1) and a linked justification of that advantage (1). • The paint will protect the metal (1), therefore making it more durable/last longer (1). • The paint will improve/enhance the metal (1), therefore making it more attractive/greater visual appeal/impact to potential users/purchasers (1).	**(2)**

Question number	Answer	Additional guidance	Mark
8(a)(ii)	Any **one** explanation that includes a working property (1), plus **two** linked justifications of that working property (1) + (1). • Aluminium is lightweight (1), which means that the desk lamp can easily be moved into position (1), therefore making the product easy to use (1). • Aluminium is malleable (1), which means that it will not break under pressure (1), therefore it can be pressed/formed into shape (1). • Aluminium is corrosion resistant (1), which means that it will not rust (1) therefore it can be left unpainted (1).	Do not accept: aluminium has a high strength to weight ratio so the desk lamp is not heavy.	**(3)**

Question number	Answer	Mark
8(b)	Any **two** explanations that include a quality-control check (1) and a linked justification of that quality-control check (1). • A spring is placed in tension and repeatedly loaded (1), therefore ensuring that it will not break with continuous use (1). • Measuring a spring before and after a load is placed on it to ensure it hasn't ben plastically deformed (1), therefore checking that the desk lamp arm will remain in tension (1). • Visual check/working tension test (1), therefore making sure that the desk lamp/spring has full working movement (1).	**(4)**

Question number	Indicative content	Mark
8(c)	**AO3 (9 marks)** Analysis of the desk lamp with respect to: • extraction of the ore results in erosion of landscape • processing aluminium ore results in high greenhouse gas emissions • any waste aluminium from production can be recycled and reused • aluminium ore has a high melting point, which results in high CO_2 emissions • transportation of the aluminium/lamp uses more fossil fuels for diesel and causes more CO_2 emissions • the lamp is manufactured in a different country from where it is sold so the environmental impact of transportation is high • company may try to offset its carbon footprint to compensate for emissions made elsewhere in the manufacturing process • the lamp uses a 40 W bulb, which uses more power than LED or energy efficient bulbs.	**(9)**

Level	Mark	Descriptor
	0	No rewardable material.
Level 1	1–3	• Attempts to interrogate and deconstruct information but connections and logical chains of reasoning are flawed. • An unbalanced appraisal of the information/issues, containing judgements that show a limited awareness of the interrelationships between factors or competing arguments. • A conclusion may be presented but it is likely to be generic assertions rather than be supported by relevant judgements.
Level 2	4–6	• Interrogates and deconstructs information and provides some connections and logical chains of reasoning. • A balanced appraisal of the information/issues, containing judgements that show an awareness of the interrelationships between factors or competing arguments. • A conclusion is presented that is partially supported by relevant judgements.
Level 3	7–9	• Interrogates and deconstructs information and provides sustained connections and logical chains of reasoning. • A well-balanced appraisal of the information/issues, containing judgements that show a thorough awareness of the interrelationships between factors or competing arguments. • A conclusion is presented that is fully supported by relevant judgements.

Write your name here

Surname	Other names

Pearson Edexcel
Level 1/Level 2 GCSE (9–1)

Centre Number | Candidate Number

Design and Technology

Component 1

Sample assessment material for first teaching
September 2017
Time: 1 hour 45 minutes

Paper Reference
1DT0/1B

You must have:
a calculator
a ruler

Total Marks

Instructions

- Use **black** ink or ball-point pen.
- **Fill in the boxes** at the top of this page with your name, centre number and candidate number.
- Answer **all** questions.
- Answer the questions in the spaces provided – *there may be more space than you need.*
- Any diagrams may NOT be accurately drawn, unless otherwise indicated.
- You must **show all your working out** with **your answer clearly identified** at the **end of your solution**.

Information

- The total mark for this paper is 100.
- The marks for **each** question are shown in brackets – *use this as a guide as to how much time to spend on each question.*

Advice

- Read each question carefully before you start to answer it.
- Try to answer every question.
- Check your answers if you have time at the end.

Turn over

S55250A

1/1

S 5 5 2 5 0 A 0 1 2 9

Pearson

SECTION A – CORE

Answer ALL questions. Write your answers in the spaces provided.

1 The materials that products are made from are chosen because of their characteristics.

(a) Figure 1 shows a table of products.

For each of the products shown, give a property of the material it is made from that makes the material suitable for the product.

The first one has been done for you.

Picture of product	Description of product	Property
 (Source: © Feng Yu/Shutterstock)	A polystyrene coffee cup	Good insulator of heat
 (Source: © 3DMAVR/Shutterstock)	A balsawood toy boat	(1) (i) .....
 (Source: © Anteromite/Shutterstock)	An aluminium paint tube	(1) (ii) .....
 (Source: © Morphart Creation/Shutterstock)	An acrylic bath	(1) (iii) .....

Picture of product	Description of product	Property
 (Source: © Borislav Bajkic/Shutterstock)	A fleece hat	(1) (iv) .....

Figure 1

(b) Figure 2 shows a coffee cup.

The manufacturers of the cup want to improve it by using temperature-responsive polymers.

(Source: © Feng Yu/Shutterstock)

Figure 2

Explain how temperature-responsive polymers could be used to improve the coffee cup.

(2)

.....

.....

.....

.....

(c) Figure 3 shows a cardboard sleeve around a coffee cup.

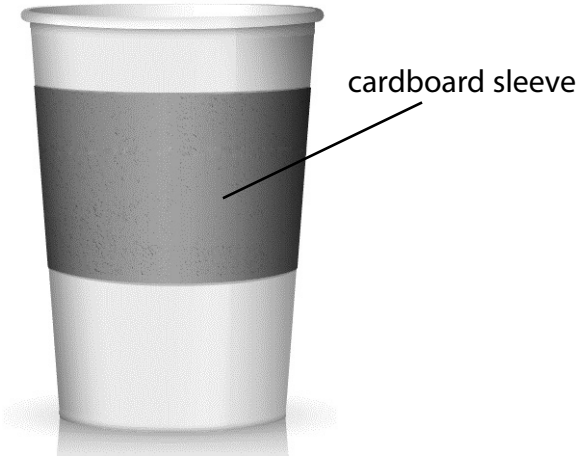

(Source: © Walking-onstreet/Shutterstock)

Figure 3

The sleeve is manufactured from corrugated cardboard.

Use notes and/or sketches to show the construction of corrugated cardboard.

You will be marked on how you apply your understanding of design and technology, not your graphical skills.

(2)

(Total for Question 1 = 8 marks)

2 Figure 4 shows an MDF square.

The MDF square will be covered with fabric to make a wall clock.

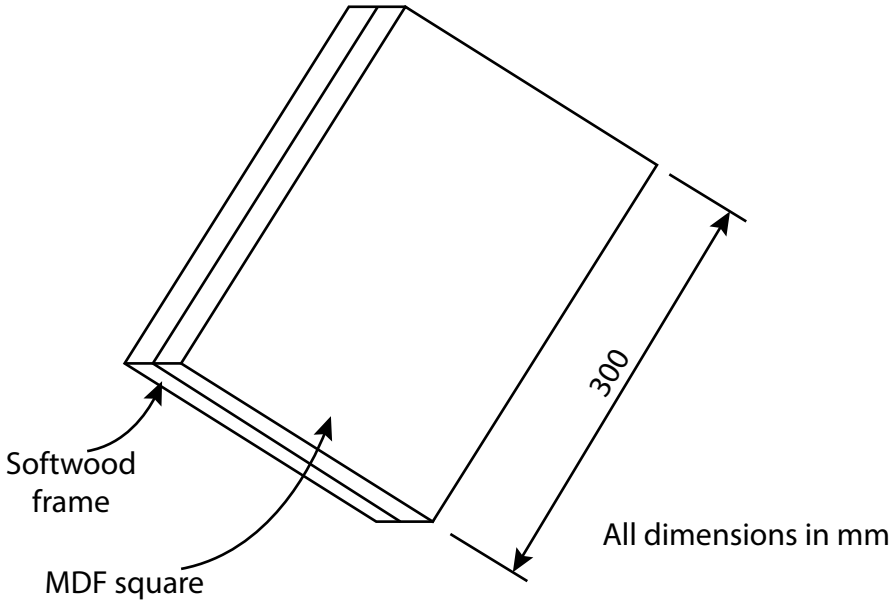

Figure 4

(a) Explain **one** benefit for the environment of using MDF rather than pine to make the wall clock.

(2)

.....

.....

.....

.....

(b) MDF is available in 61 cm × 122 cm sheets.

Calculate how many 300 mm × 300 mm squares can be cut from the available sheet.

(3)

.....

(c) The clock face is covered with a blended fibre fabric.

Explain **one** advantage of blending fibres to make fabrics.

(2)

.....

.....

.....

.....

(d) Figure 5 shows a clock mechanism.

(Source: www.clockparts.co.uk)

Figure 5

Explain **one** benefit to the clock manufacturer of buying the clock mechanisms as standard components.

(2)

.....

.....

.....

.....

(Total for Question 2 = 9 marks)

3 Levers are classified as class 1, 2 or 3.

(a) Figure 6 shows two different products, both are types of lever.

F is the fulcrum, E is the effort and L is the load.

For each of the products shown, name the type of lever.

Product	Type of lever
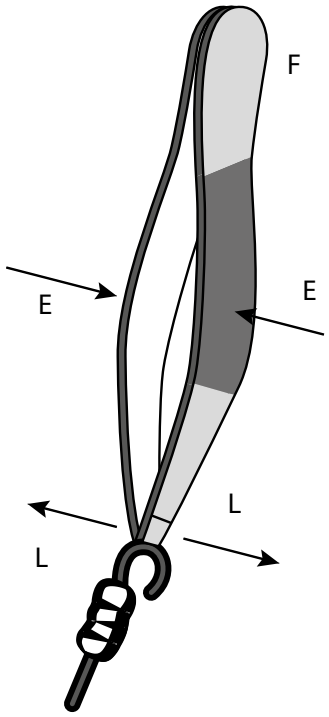 Tweezers	**(1)** (i) .....
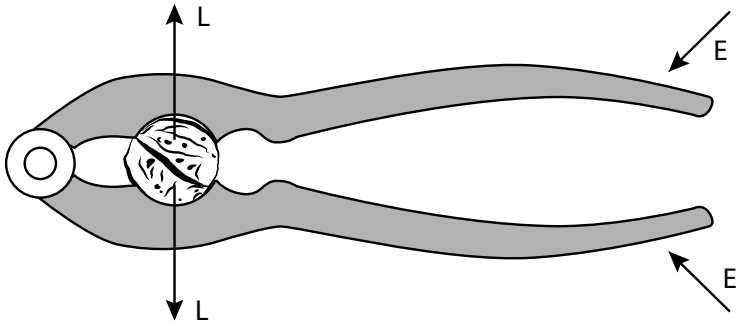 Nutcracker	**(1)** (ii) .....

Figure 6

(b) Figure 7 shows a loaded wheelbarrow.

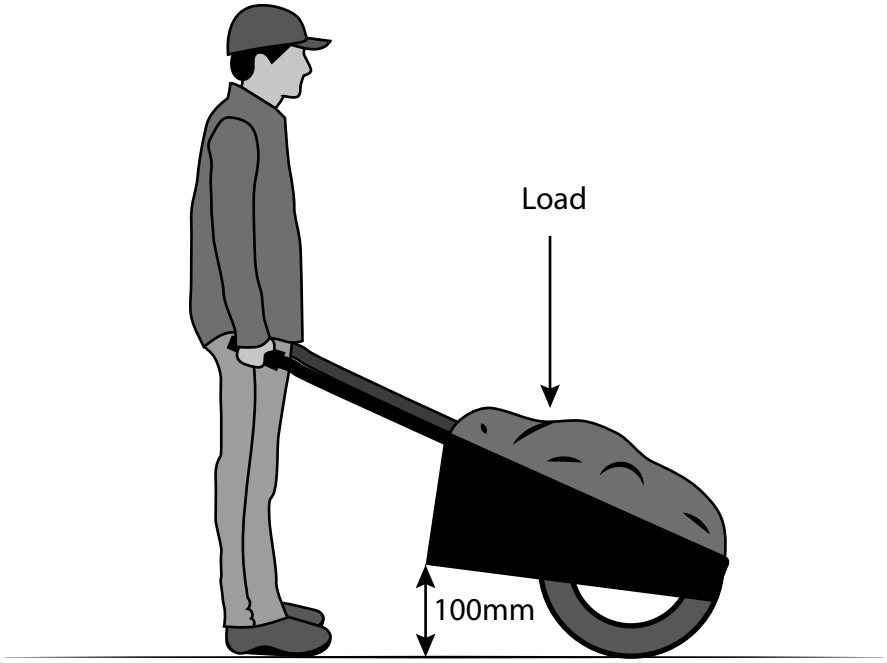

Figure 7

Mechanical advantage (MA) is calculated by:

$$MA = \frac{\text{load}}{\text{effort}}$$

The velocity ratio (VR) is 4 and the effort is 100 N.

The efficiency of the system is given by:

$$\text{Efficiency} = \frac{MA}{VR} \times 100\%$$

The system is 85% efficient.

Calculate the maximum load that can be lifted.

(3)

..... N

(c) Explain **one** reason why the length of the handles on the wheelbarrow would be increased.

(2)

.....

.....

.....

.....

(d) Explain **two** benefits that just-in-time (JIT) manufacturing could have for the manufacturer of the wheelbarrow.

(4)

1 .....

.....

.....

2 .....

.....

.....

(Total for Question 3 = 11 marks)

4 Figure 8 shows a gate.

The gate is moved by an electric motor in combination with a rack and pinion mechanism.

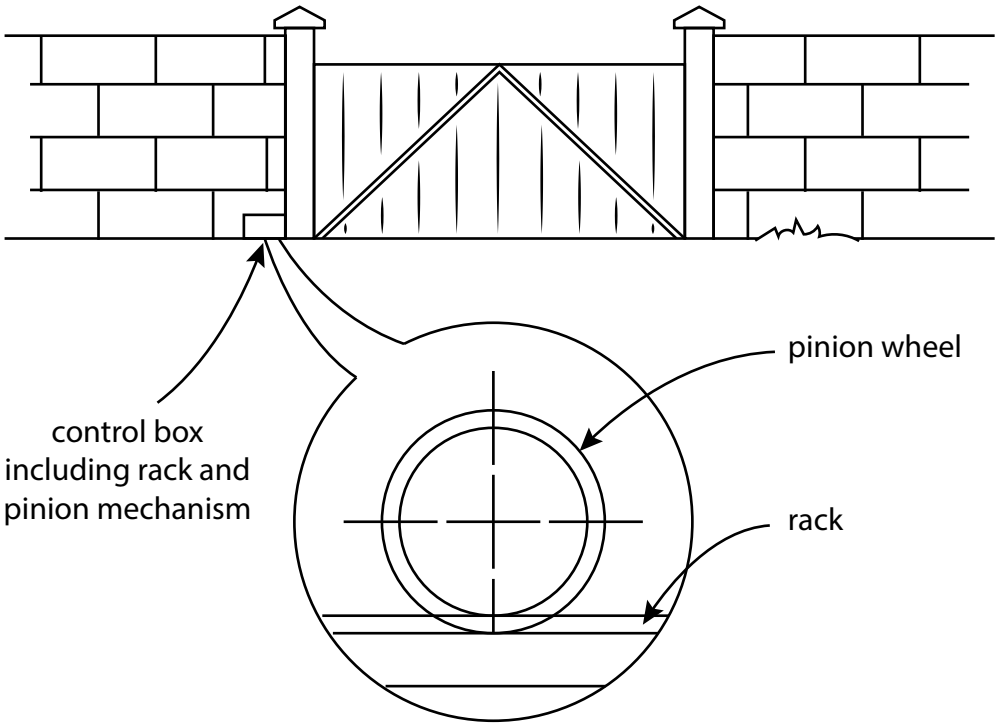

Figure 8

(a) Give **one** other application of a rack and pinion mechanism.

(1)

.....

(b) The gate needs to move 3 m to open fully.

The pinion wheel has a radius of 60 mm.

Calculate the number of revolutions the pinion wheel must rotate in order to open the gate fully.

Give your answer to the nearest whole number.

(4)

Use $\pi = 3.142$

Formula for circumference = πd

.....

(c) Figure 9 shows a graph of the approximate number of people employed in solar-power-related industries between 2012 and 2016.

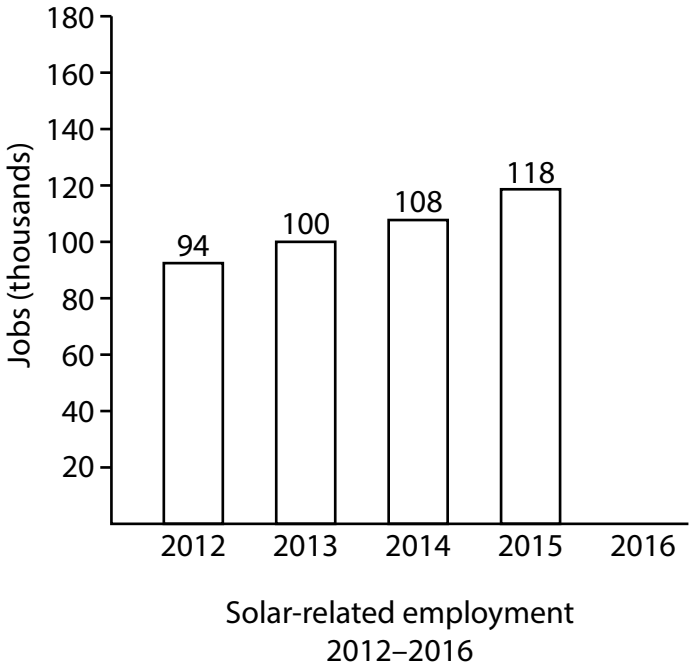

Figure 9

Analyse the graph.

Calculate the expected increase in the number of people employed in solar-power related industries in 2016, based on the current trend.

(1)

increase = ...

(d) The manufacturer considered two different power supplies to power the electric gates.

Figure 10 shows data for these power supplies.

Factor	Solar	Mains electricity
Storage method	Battery	None required on National Grid
Upfront costs	£6000	Nil
Cost per kwh	Nil	9.596 pence
Annual standing charge	Nil	£116

Figure 10

Analyse the data provided.

Discuss the issues that the manufacturer would need to consider when making the decision about which power supply to choose.

(6)

.....

.....

.....

.....

.....

.....

.....

.....

.....

.....

.....

.....

(Total for Question 4 = 12 marks)

TOTAL FOR SECTION A = 40 MARKS

SECTION B – PAPERS AND BOARDS

Answer ALL questions. Write your answers in the spaces provided.

5 Figure 11 shows a design solution and some additional information for chocolate egg packaging.

Varnished folding box board (carton board)

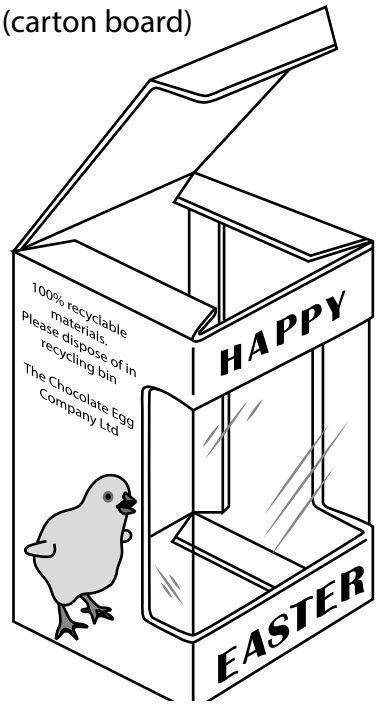

Side view of the chocolate egg

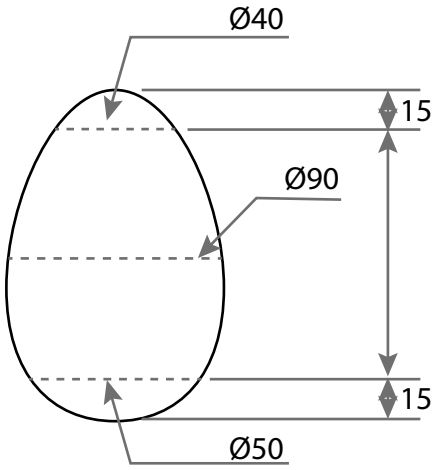

Dimensions showing diameter of egg in three places including the widest point

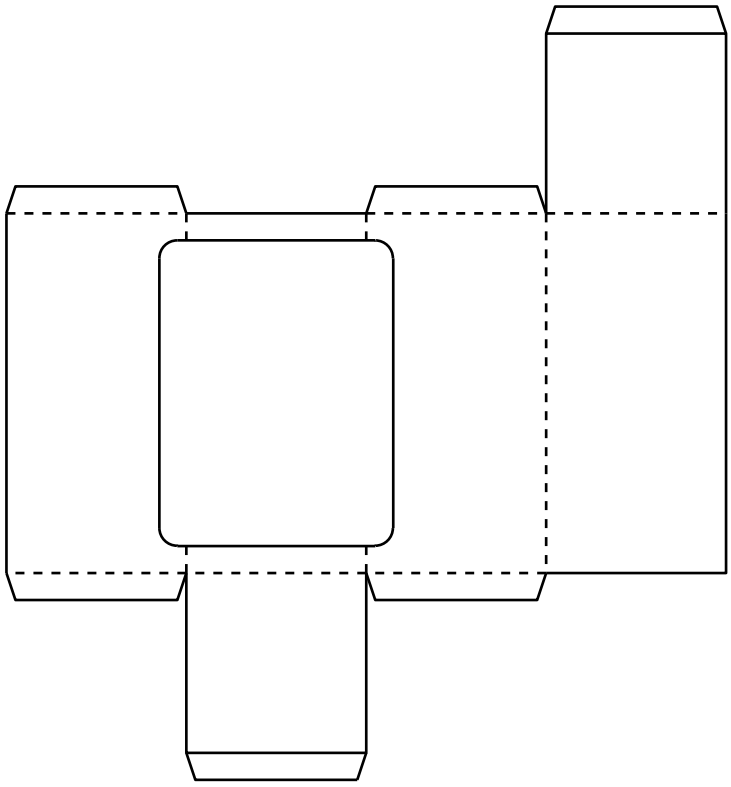

All dimensions are in millimetres. Ø = diameter.

Figure 11

(a) The chocolate egg packaging needs to be improved to include the following specification points.

The chocolate egg packaging must:

- hold the egg so it cannot move around
- appeal to all languages and cultures
- have a visible tamper evident closure that does not spoil the design.

Use notes and/or sketches to show how the chocolate egg packaging could be modified to include these three specification points.

You will be marked on how you apply your understanding of design and technology, not your graphical skills.

Use the outline of the original design solution to show your modifications.

(6)

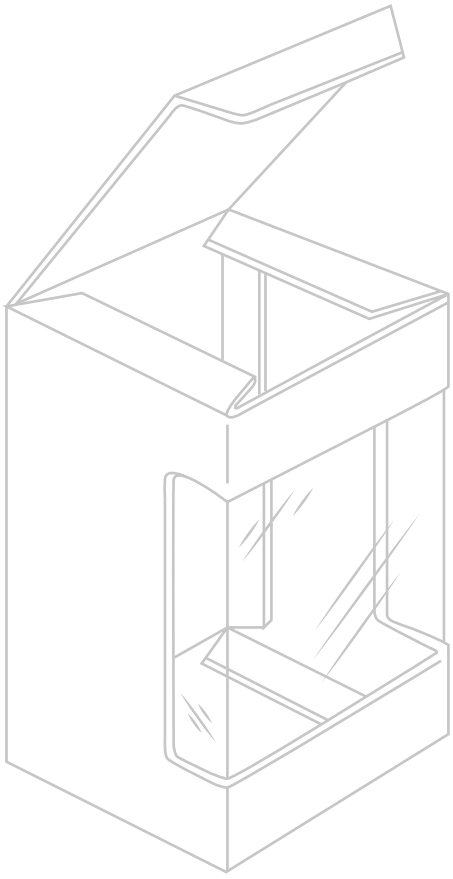

(b) Figure 12 shows a chocolate box.

The chocolate box must appeal to the luxury market.

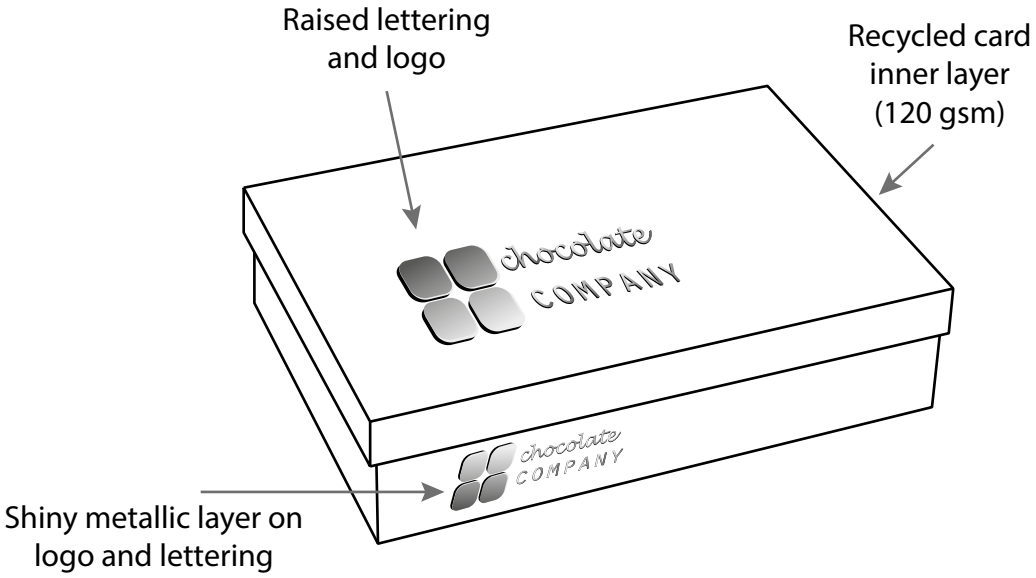

Figure 12

Analyse the chocolate box.

Explain **two** ways the chocolate box meets or fails to meet the criteria of appealing to the luxury market.

(4)

1 .....

.....

.....

.....

2 .....

.....

.....

.....

(Total for Question 5 = 10 marks)

6 Figure 13 shows some hardback books.

The hardback book is made as a one-off prototype.

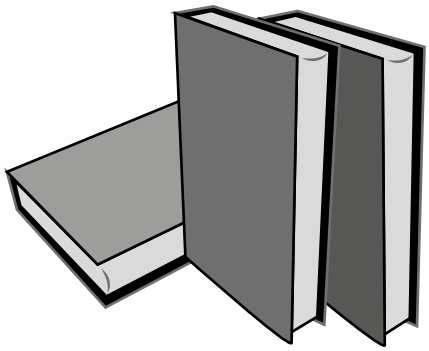

Figure 13

(a) (i) Explain **one** reason why a cutting mat was used when a prototype of the book was made.

(2)

.....

.....

.....

.....

(ii) Figure 14 shows a guillotine that is used in the production of hardback books.

(Source: © zefart/Shutterstock)

Figure 14

Explain **one** reason why a guillotine is used in the production of hardback books.

(2)

.....

.....

.....

.....

(b) Figure 15 shows a removable dust-jacket cover.

The removable dust-jacket cover will be cut and creased using the die-cutting process.

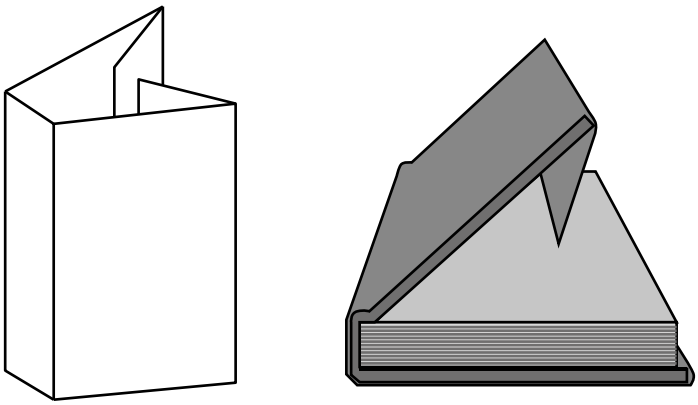

Figure 15

Use notes and/or sketches to show the die-cutting process for producing the dust-jacket cover.

You will be marked on how you apply your understanding of design and technology, not your graphical skills.

(4)

(c) A limited edition of this book has been produced using case binding.

Explain **one** reason why case binding has been chosen.

(2)

.....

.....

.....

.....

(d) The dust jacket of a limited edition book is going to be batch produced.

Name **two** methods that could be used to print the dust jacket in batches.

For each method, explain one advantage to the manufacturer of using this method.

(6)

Method 1

.....

Explanation

.....

.....

.....

.....

.....

Method 2

.....

Explanation

.....

.....

.....

.....

.....

(Total for Question 6 = 16 marks)

7 Figure 16 shows a cat house.

The cat house is made of corrugated cardboard.

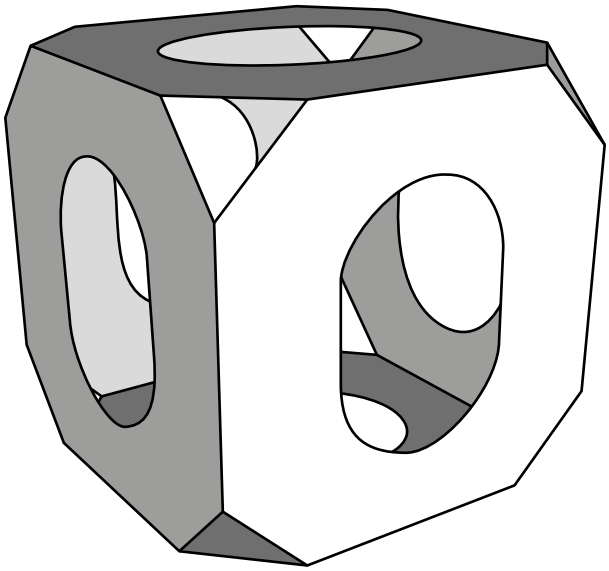

Figure 16

(a) Give **one** method of strengthening the cardboard used in the cat house.

(1)

.....

(b) The cat box is manufactured using a web-fed process.

Explain **two** advantages of using a web-fed process.

(4)

1 .....

.....

.....

.....

.....

2 .....

.....

.....

.....

.....

(c) Figure 17 shows one side of the cat house.

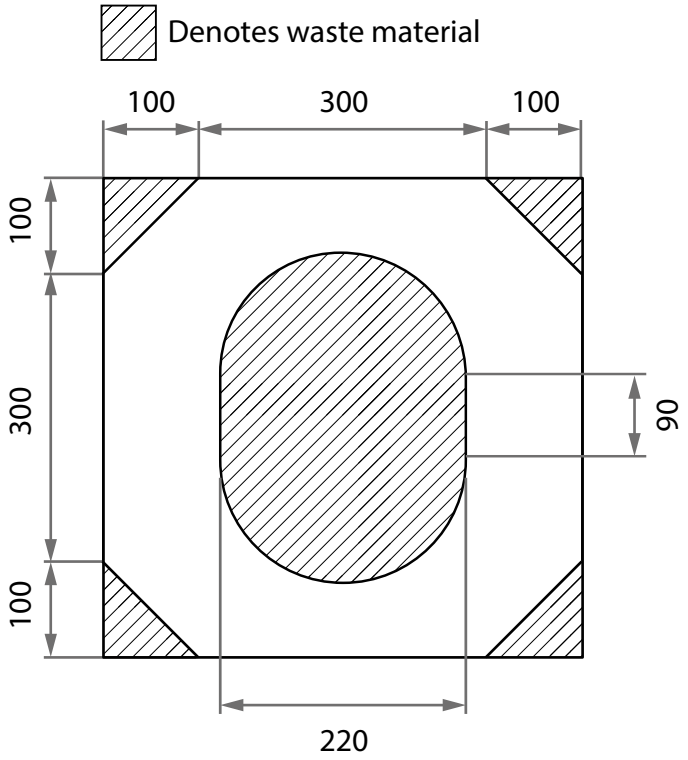

All dimensions are in millimetres.

Figure 17

Calculate how much cardboard is used when cutting out one side of the cat house from a square piece, in cm2.

Give your answer to 2 decimal places.

Area of a circle = $\pi \times r^2$

Area of a triangle = ½ × base × height

Use $\pi = 3.142$

(5)

..... cm²

(d) Explain **two** reasons why corrugated cardboard is an appropriate material for the cat box.

(6)

1 .....

.....

.....

.....

.....

.....

2 .....

.....

.....

.....

.....

.....

(Total for Question 7 = 16 marks)

8 Figure 18 shows a Tetra Pak® used for holding orange juice.

(Source: © Alistair Heap/Alamy Stock Photo)

Figure 18

(a) (i) Explain **one** reason why a flexographic print was applied to the Tetra Pak.

(2)

.....

.....

.....

.....

(ii) Explain **one** working property of aluminium that would make it a suitable choice for one of the layers of the Tetra Pak.

(3)

.....

.....

.....

.....

(b) Explain **two** benefits to the manufacturer of using automated registration control to check print quality.

(4)

1 .....

.....

.....

.....

2 .....

.....

.....

.....

(c) The Tetra Pak is sold in the UK.

Figure 19 shows information about the Tetra Pak.

Materials used	• Paperboard (74%) FSC certified • Aluminium (4%) • LDPE (22%)
Use of recycled materials	• 0%
Recyclability	• Requires a specialist recycling facility (20%–40% currently recycled in the UK)

Figure 19

Analyse the information in Figure 19.

Evaluate the Tetra Pak with reference to its ecological impact.

(9)

.....

.....

(Total for Question 8 = 18 marks)

TOTAL FOR SECTION B = 60 MARKS
TOTAL FOR PAPER = 100 MARKS

Component 1 mark scheme – 1DT0/1B

Section A – Core content

Question number	Answer	Mark
1(a)(i)	Any **one** property from: • lightweight (1) • soft (1) • low density (1).	**(1)**

Question number	Answer	Mark
1(a)(ii)	Any **one** property from: • ductile (1) • malleable (1) • non-corrosive/will not rust (1) • non-reactive with paint (1).	**(1)**

Question number	Answer	Mark
1(a)(iii)	Any **one** property from: • waterproof (1) • plasticity (1) • electrical insulator (1).	**(1)**

Question number	Answer	Mark
1(a)(iv)	Any **one** property from: • lightweight (1) • soft (1) • good water resistance/hydrophobic (1) • good insulator of heat (1)	**(1)**

Question number	Answer	Additional guidance	Mark
1(b)	Any **one** explanation that includes a method of use (1) and a linked justification of that use (1). • The temperature-responsive polymers could give an indication of when it is safe to drink (1) as they will change colour when hot/cool (1). • The temperature-responsive polymers can be used as an aesthetic feature (1), as any logos/images will change colour when hot/cool (1).	Do not award a single mark for simply saying 'they could be used'.	**(2)**

Question number	Answer	Mark
1(c)	**Marks will be awarded for understanding of design and technology, not graphical skills.** Notes and/or sketches that include: • flat linerboard/outer/inner surface (1) • fluted corrugated sheet (1). Example of candidate response: 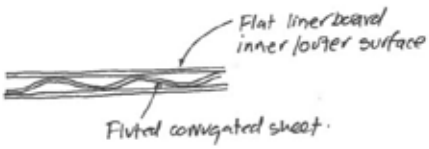	**(2)**

Question number	Answer	Mark
2(a)	Any **one** explanation that includes a benefit (1) and a linked justification of that benefit (1). • MDF is made from waste material (1), therefore the waste will not need to go to landfill/be dumped (1). • Using MDF will reduce the amount of natural timber being consumed/cut down (1), therefore pine as a natural resource will last longer/be put to better use (1).	**(2)**

Question number	Answer	Additional guidance	Mark
2(b)	A calculation that includes: • conversion of units (1) • correct number of whole pieces by dimension (1) • correct sum (1). 300 mm = 30 cm (1) $\frac{61}{30}$ = 2 whole cuts $\frac{122}{30}$ = 4 whole cuts (1) 2 × 4 = 8 whole cuts (1)	Award full marks for correct numerical answer without working. Allow ecf if candidate gets part of calculation wrong.	**(3)**

Question number	Answer	Mark
2(c)	Any **one** explanation that includes an advantage (1) and a linked justification of that advantage (1). • Blended fibres combine the properties of the original fibres (1), therefore the properties can be improved/enhanced (1). • Combing/blending fibres allows cheaper fibres to be incorporated (1), therefore the overall cost of the fabric will be reduced (1). • The appearance/performance of the fabric can be improved/enhanced (1), therefore it is more attractive/appealing to the end user (1). Do not accept cheap on its own, unless qualified.	**(2)**

Question number	Answer	Mark
2(d)	Any **one** explanation that includes a benefit (1) and a linked justification of that benefit (1). • They will/may not be able to make the clock mechanism themselves (1), therefore they do not need to invest in specialist machinery/training/workforce (1). • They will be made by a specialist (1), therefore they will come with a guarantee/ensure quality (1).	**(2)**

Question number	Answer	Mark
3(a)(i)	Type 3	**(1)**

Question number	Answer	Mark
3(a)(ii)	Type 2	**(1)**

Question number	Answer	Additional guidance	Mark
3(b)	A calculation that includes: • transposition of formula and calculation to show MA ÷ VR = 0.85 (1) • transposition of formula to show MA = 3.4 (1) • transposition of MA formula and calculation of load = 340 N (1). Efficiency = $\frac{MA}{VR} \times 100\%$ $\frac{MA}{VR}$ = 0.85 (1) VR × 0.85 = MA VR = 4 MA = 4 × 0.85 = 3.4 (1) Effort = 100 MA = $\frac{load}{effort}$ 3.4 = $\frac{load}{100}$ load = 100 × 3.4 = 340 N (1)	Award full marks for correct numerical answer without working. Allow ecf if candidate gets part of calculation wrong.	**(3)**

Question number	Answer	Mark
3(c)	Any **one** explanation that includes a benefit (1) and a linked justification of that benefit (1). • This will increase the mechanical advantage (1), therefore making it easier to lift the wheelbarrow (1). • A greater load/weight can be lifted (1) because there is greater leverage (1).	**(2)**

Question number	Answer	Mark
3(d)	Any **two** explanations that include a benefit (1) and a linked justification of that benefit (1). • They will have much less material in stock (1), therefore they have less money tied up/invested in materials they are not using (1). • They do not have to employ staff on permanent contracts (1), therefore they can employ staff as and when required, reducing the wage bill (1). • Once the wheelbarrows have been manufactured they are shipped out (1), therefore no expensive storage/warehouse required.	**(4)**

Question number	Answer	Mark
4(a)	Any **one** application from: • steering mechanism (1) • slush/lock gate (1) • pillar drilling machine (1) • lathe bed/saddle slide (1).	**(1)**

Question number	Answer	Additional guidance	Mark
4(b)	A calculation that includes: • calculation of circumference (1) • conversion of units: 3 m to 3000 mm (1) • correct sum = 7.96 (1) • 8 whole turns (1). $C = \pi d$ = 3.142 × 120 = 377.04 mm (1) 3 m = 3000 mm (1) $\frac{3000}{377.04} = 7.96$ (1) = 8 whole turns (1)	Award full marks for correct numerical answer without working. Allow ecf if candidate gets part of calculation wrong.	**(4)**

Question number	Answer	Mark
4(c)	12/12 thousand/12 000	**(1)**

Question number	Indicative content	Mark
4(d)	**AO3 (6 marks)** • Solar power is expensive to set up. • Solar power is free once installed. • Limited by sunlight hours. • Batteries lose ability to charge/recharge over time. • Mains power incurs a flat fee every year even if you do not use it. • Every time you open/close the gates it will cost you money if using mains power. • Power lines can be blown down in the wind, which means you cannot operate the gate in a power cut, therefore you may be shut in/out of your house. • Installing power lines is very expensive in remote areas, which means it might be prohibitively expensive to install them, therefore making solar power a more viable option. • If the solar exposure is low the batteries might not charge up enough, which means there might not be sufficient power to open/close the gates. • The standing charge is a flat fee that has to be paid, which means if you are away for a long period of time and do not use the gates, you still have to pay the charge, which will be a waste of money.	**(6)**

Level	Mark	Descriptor
	0	No rewardable material.
Level 1	1–2	• Attempts to interrogate and deconstruct information but connections and logical chains of reasoning are flawed. • An unbalanced appraisal of the information/issues, containing judgements that show a limited awareness of the interrelationships between factors or competing arguments.
Level 2	3–4	• Interrogates and deconstructs information and provides some connections and logical chains of reasoning. • A balanced appraisal of the information/issues, containing judgements that show an awareness of the interrelationships between factors or competing arguments.
Level 3	5–6	• Interrogates and deconstructs information and provides sustained connections and logical chains of reasoning. • A well-balanced appraisal of the information/issues, containing judgements that show a thorough awareness of the interrelationships between factors or competing arguments.

Section B – Papers and boards

Question number	Answer	Mark
5(a)	**Marks will be awarded for understanding of design and technology, not graphical skills.** Notes and/or sketches that include: • hold the egg (1) so it cannot move around (1), e.g. a hold solution such as folded inserts/moulded pulp/ stacked boards (1) so that it cannot move around, e.g. top and bottom (1) • appeal to all languages (1) and cultures (1), e.g. appeal to all languages, such as use of minimal text/images or symbols/multiple languages (1) cultures, e.g. patterns/cross-cultural themes (1) • have a visible tamper evident closure (1) that does not spoil the design (1), e.g. a visible tamper evident closure such as a sticker/glued tab (1), which does not spoil the design, e.g. it does not obscure or is part of the design/use of appropriate materials/indication of appropriate dimensions (1). Example of candidate response: 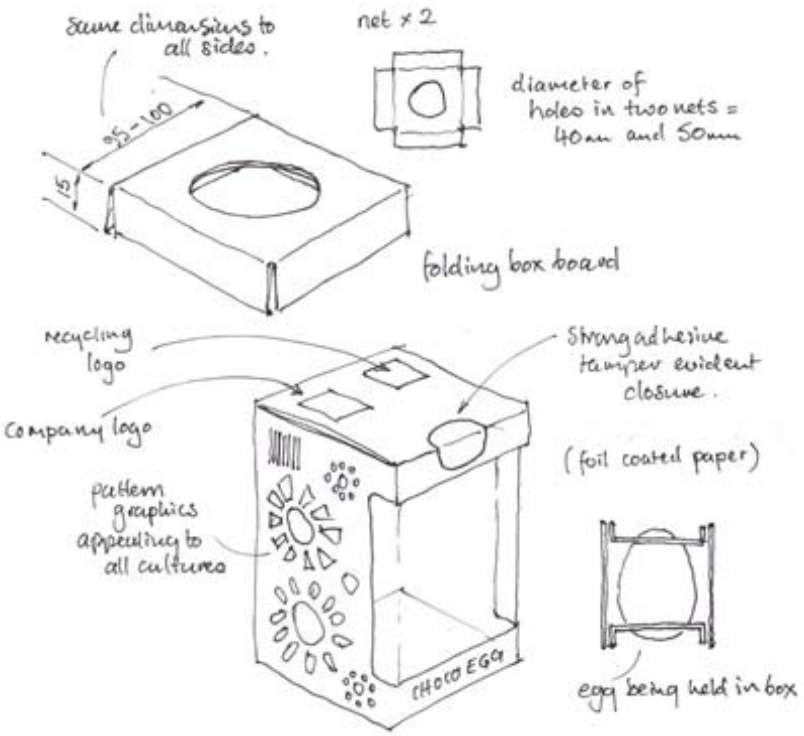	(6)

Question number	Answer	Mark
5(a) continued	Annotated notes: Same dimensions to all sides, 15, 95–100, next × 2, diameter of holes in two nets = 40 mm and 50 mm, folding box board, strong ahdesive tamper evident closure, (foil coated paper), egg being held in box, recycling logo, company logo, pattern graphics appealing to all cultures.	

Question number	Answer	Mark
5(b)	Any **one** explanation that includes a way (1) and a linked justification of that way (1). • The serif font has been chosen by the designer which has decorative serifs and varies in line thickness (1) as serif fonts have a more historical/traditional/premium feel the design criterion of appealing to the luxury market has been met (1). • The embossed text and logo stand out above the surface of the lid to emphasise aspects of the design (1). This adds a tactile/premium/luxury feel and makes the product stand out as non-luxury brands will not want to increase costs by paying for additional processes (1).	**(4)**

Question number	Answer	Mark
6(a)(i)	Any **one** explanation that includes a reason (1) and a linked justification of that reason (1). • A cutting mat is self-healing (1), therefore it will not be damaged and can be used again (1). • A cutting mat protects the work surface (1), providing a barrier to prevent the work surface from being damaged (1).	**(2)**

Question number	Answer	Additional guidance	Mark
6(a)(ii)	Any **one** explanation that includes a reason (1) and a linked justification of that reason (1). • The signatures/pages/ cover/dust jacket need to have identical straight edges (1), which can be achieved because of the straight blade of the guillotine (1). • The book is batch produced so the process of cutting the book with the guillotine can be automated (1), which means that production costs/lead time is reduced (1).	Accept all appropriate explanations and justifications.	**(2)**

Question number	Answer	Additional guidance	Mark
6(b)	**Marks will be awarded for understanding of design and technology, not graphical skills.** Notes and/or sketches that include: • suitable die shown/steel die cutter is made/laser cut/assembled to shape (1) • the steel die cutter/paper is mounted in the machine (1) • the die cutter is pressed into the paper by the force of the machine/the blades cut and crease the paper (1) • the rubbers force out the nets/paper (1). Example of candidate response: 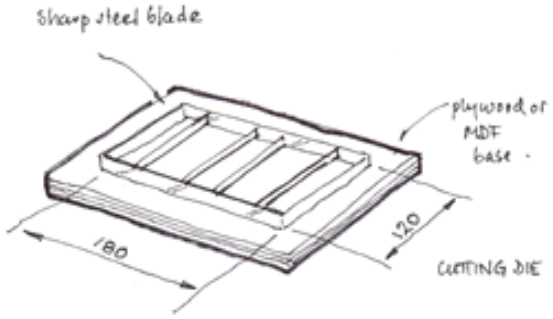 Annotated notes: sharp steel blade, plywood or MDF base, cutting die, 120, 180. 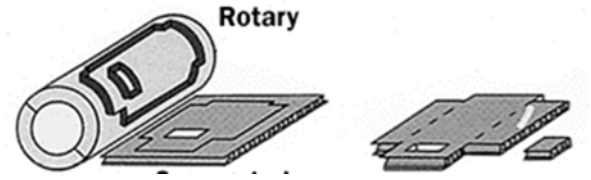 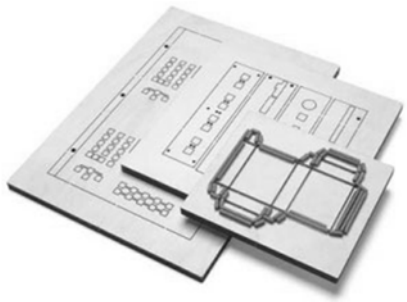 Cutting Die (Source: www.zevendesign.com/cutting-die/)	Accept other stages appropriate to the process.	**(4)**

Question number	Answer	Additional guidance	Mark
6(c)	Any **one** explanation that includes a reason (1) and a linked justification of that reason (1). • Case binding uses thick board for covers (1), therefore they are more durable/protects product from bending/protects pages from damage/adds stiffness (1). • In case binding, book pages will be stitched together (1), therefore they are less likely to come apart/more durable/protects pages from damage (1). • Case binding produces a higher quality/more durable product than, for example perfect binding (1), therefore it will be more appealing to customers/suitable for a limited edition (1).	Accept all appropriate justifications.	**(2)**

Question number	Indicative content	Additional guidance	Mark
6(d)	Any **two** explanations that include a reason (1), plus **two** linked justifications of that reason (1) + (1). • Offset lithography (1) – less human intervention is required (1), which results in faster production rates in order to meet demand and reduce unit costs (1). • Digital printing can be used (1), designs can be generated and output without any need for plates (1), which means production times are short/quick response to demand (1).	Accept all appropriate justifications. Do **not** accept repeated points or justifications. All arguments should focus on the dust jacket.	**(6)**

Question number	Answer	Additional guidance	Mark
7(a)	Any **one** method from: • lamination (1) • impregnation with wax/waterproof PVA (1) • coating (1) • double wall/tri-wall (1).	Accept any appropriate synonym.	**(1)**

Question number	Answer	Additional guidance	Mark
7(b)	Any **two** explanations that include a reason (1) and a linked justification of that reason (1). • It is a continuous feed process (1), therefore there is no pause in the production while the sheets are loaded (1). • It allows for efficient lay plans/tessellation of nets (1), therefore reducing material wastage/impact on the environment/costs (1). • Allows you to use inline continuous processes such as rotary die-cutting (1), therefore making it suitable for high volume/batch/mass production.	Accept any appropriate justifications and expansions. Do **not** accept reversed argument.	**(4)**

Question number	Answer	Additional guidance	Mark
7(c)	A calculation that includes: • conversion of units from mm to cm before further calculations • calculation of total area = 2500 cm^2 (1) • calculation of area used: area of the rectangles = 198 cm^2 (1) area of triangles = 200 cm^2 (1) area equivalent to 1 full circle = 380.182 cm^2 (1) • total area used given to 2 d.p.: total area – total area wasted = 1721.82 cm^2 (1).	Do not award the final mark if the answer is still in mm^2. Award full marks for correct numerical answer without working. Allow ecf if candidate gets part of calculation wrong.	**(5)**

Question number	Answer	Additional guidance	Mark
7(d)	Any **two** explanations that include a reason (1), plus **two** linked justifications of that reason (1) + (1). • Corrugated cardboard is stronger than other boards (1) because it is made up from layers of flat and ribbed papers/boards (1), therefore it will last for longer as the cat uses it (1). • Corrugated cardboard does not have to be bleached (1), therefore it will not contain any harmful toxins (1) and so will not harm the cat (1). • Corrugated cardboard can be double/ tri-walled (1), which means that it has a better strength to weight ratio (1) so it can withstand knocks/bumps/cats clawing at it (1).	Accept all appropriate justifications. Do **not** accept repeated points or justifications.	**(6)**

Question number	Answer	Additional guidance	Mark
8(a)(i)	Any **one** explanation that includes an advantage (1) and a linked justification of that advantage (1). • It is suitable for high-volume production (1) because it can be used with a variety of quick-drying inks (1). • It enables printing on porous and non-porous surfaces (1), therefore it is suitable for all layers of carton (1). • Flexography is ideal for solid colour printing/simple design (1), therefore it is more cost effective for the production of cartons (1).	Accept all appropriate justifications. Do **not** accept repeated points or justifications.	**(2)**

Question number	Answer	Additional guidance	Mark
8(a)(ii)	Any **one** explanation that includes a reason (1), plus **two** linked justifications of that reason (1) + (1). • Aluminium foil protects against oxygen/light (1) to maintain the nutritional value/flavours of the product (1), therefore the product will last longer, reducing waste (1). • Aluminium foil protects against flavour contamination (1) so the product will not be affected by other foods (1), therefore can be stored safely in any food cupboard (1). • Aluminium foil protects against microbial contamination (1) so the product will not be contaminated by harmful bacteria which would spoil the product and could be harmful (1), therefore making it suitable for sterilised products such as orange juice (1).	Accept all appropriate justifications. Do **not** accept repeated points or justifications.	**(3)**

Question number	Answer	Additional guidance	Mark
8(b)	Any **two** explanations that include a benefit (1) and a linked justification of that benefit (1). • Quicker than manual checks (1), therefore it does not slow down production (1). • It allows for 100% inspection (1), therefore all defects are detected (1). • Reduced human involvement (1), therefore reducing labour costs/wage bill (1).	Accept all appropriate justifications. Do **not** accept repeated points or justifications.	**(4)**

Question number	Indicative content	Mark
8(c)	**AO3 9 marks** Analysis of the carton with respect to: • FSC paperboard sourced from managed forests so although new trees are cut down, the environmental impact is reduced by replanting. • materials difficult to separate and recycling may not be economical • may not be economical to extract LPE • LDPE derived from crude oil – reference to environmental impact • extraction of the aluminium ore results in erosion of landscape • processing aluminium ore results in high greenhouse gas emissions • any waste aluminium from production can be recycled and reused • transportation of the aluminium uses more fossil fuels for diesel and causes more CO_2 emissions • company may try to offset its carbon footprint to compensate for emissions made elsewhere in the manufacturing process.	**(9)**

Level	Mark	Descriptor
	0	No rewardable material.
Level 1	1–3	• Attempts to interrogate and deconstruct information but connections and logical chains of reasoning are flawed. • An unbalanced appraisal of the information/issues, containing judgements that show a limited awareness of the interrelationships between factors or competing arguments. • A conclusion may be presented but it is likely to be generic assertions rather than be supported by relevant judgements.
Level 2	4–6	• Interrogates and deconstructs information and provides some connections and logical chains of reasoning. • A balanced appraisal of the information/issues, containing judgements that show an awareness of the interrelationships between factors or competing arguments. • A conclusion is presented that is partially supported by relevant judgements.
Level 3	7–9	• Interrogates and deconstructs information and provides sustained connections and logical chains of reasoning. • A well-balanced appraisal of the information/issues, containing judgements that show a thorough awareness of the interrelationships between factors or competing arguments. • A conclusion is presented that is fully supported by relevant judgements.

Write your name here

Surname	Other names

Pearson Edexcel
Level 1/Level 2 GCSE (9–1)

Centre Number | Candidate Number

Design and Technology

Component 1

Sample assessment material for first teaching
September 2017
Time: 1 hour 45 minutes

Paper Reference
1DT0/1C

You must have:
a calculator
a ruler

Total Marks

Instructions

- Use **black** ink or ball-point pen.
- **Fill in the boxes** at the top of this page with your name, centre number and candidate number.
- Answer **all** questions.
- Answer the questions in the spaces provided – *there may be more space than you need.*
- Any diagrams may NOT be accurately drawn, unless otherwise indicated.
- You must **show all your working out** with **your answer clearly identified** at the **end of your solution**.

Information

- The total mark for this paper is 100.
- The marks for **each** question are shown in brackets – *use this as a guide as to how much time to spend on each question.*

Advice

- Read each question carefully before you start to answer it.
- Try to answer every question.
- Check your answers if you have time at the end.

Turn over

S55251A

1/1

S 5 5 2 5 1 A 0 1 3 0

Pearson

SECTION A – CORE

Answer ALL questions. Write your answers in the spaces provided.

1 The materials that products are made from are chosen because of their characteristics.

(a) Figure 1 shows a table of products.

For each of the products shown, give a property of the material it is made from that makes the material suitable for the product.

The first one has been done for you.

Picture of product	Description of product	Property
 (Source: © Feng Yu/Shutterstock)	A polystyrene coffee cup	Good insulator of heat
 (Source: © 3DMAVR/Shutterstock)	A balsawood toy boat	(1) (i) .....
 (Source: © Anteromite/Shutterstock)	An aluminium paint tube	(1) (ii) .....
 (Source: © Morphart Creation/Shutterstock)	An acrylic bath	(1) (iii) .....

Picture of product	Description of product	Property
 (Source: © Borislav Bajkic/Shutterstock)	A fleece hat	**(1)** (iv) .....

Figure 1

(b) Figure 2 shows a coffee cup.

The manufacturers of the cup want to improve it by using temperature-responsive polymers.

(Source: © Feng Yu/Shutterstock)

Figure 2

Explain how temperature-responsive polymers could be used to improve the coffee cup.

(2)

.....

.....

.....

.....

(c) Figure 3 shows a cardboard sleeve around a coffee cup.

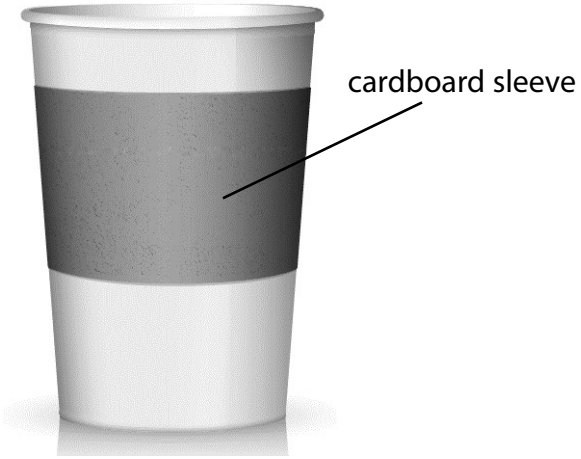

(Source: © Walking-onstreet/Shutterstock)

Figure 3

The sleeve is manufactured from corrugated cardboard.

Use notes and/or sketches to show the construction of corrugated cardboard.

You will be marked on how you apply your understanding of design and technology, not your graphical skills.

(2)

(Total for Question 1 = 8 marks)

2 Figure 4 shows an MDF square.

The MDF square will be covered with fabric to make a wall clock.

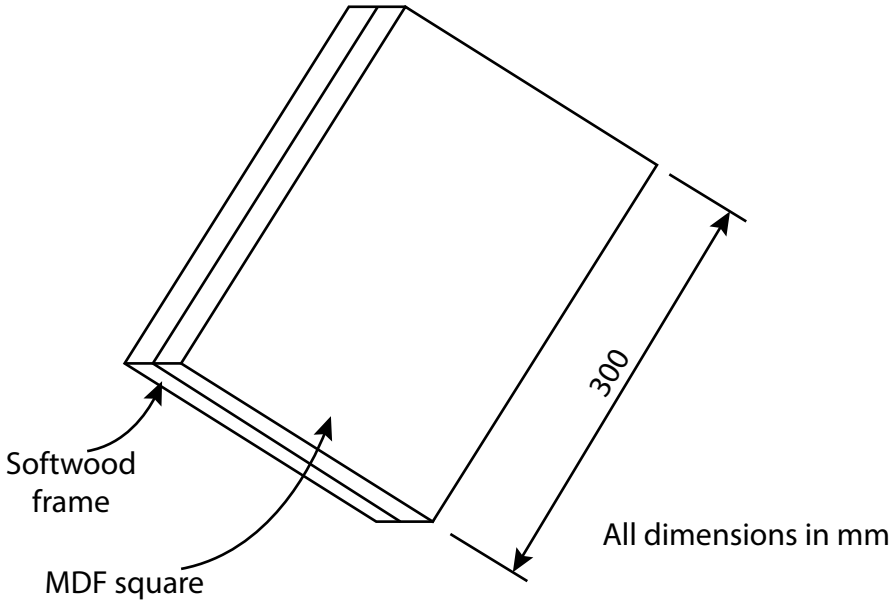

Figure 4

(a) Explain **one** benefit for the environment of using MDF rather than pine to make the wall clock.

(2)

.....

.....

.....

.....

(b) MDF is available in 61 cm × 122 cm sheets.

Calculate how many 300 mm × 300 mm squares can be cut from the available sheet.

(3)

.....

(c) The clock face is covered with a blended fibre fabric.

Explain **one** advantage of blending fibres to make fabrics.

(2)

.....

.....

.....

.....

(d) Figure 5 shows a clock mechanism.

(Source: www.clockparts.co.uk)

Figure 5

Explain **one** benefit to the clock manufacturer of buying the clock mechanisms as standard components.

(2)

.....

.....

.....

.....

(Total for Question 2 = 9 marks)

3 Levers are classified as class 1, 2 or 3.

(a) Figure 6 shows two different products, both are types of lever.

F is the fulcrum, E is the effort and L is the load.

For each of the products shown, name the type of lever.

Product	Type of lever
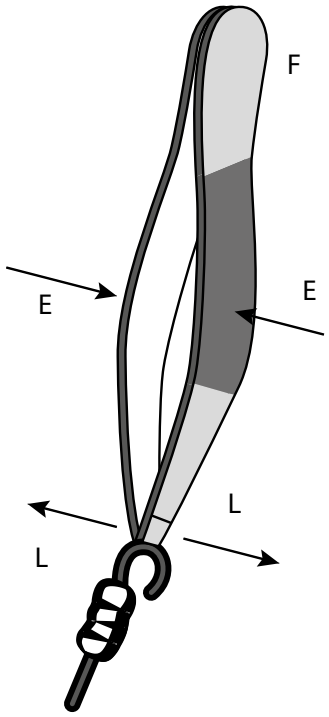 Tweezers	**(1)** (i) .....
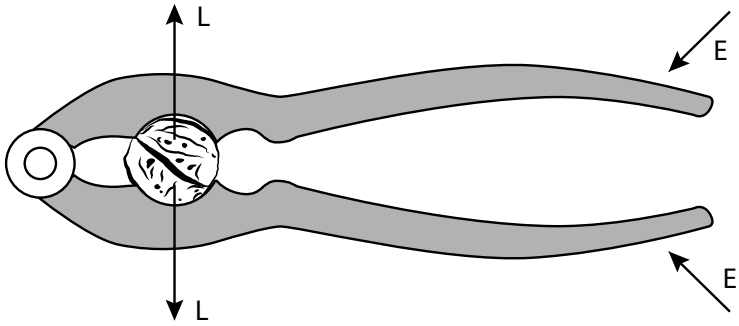 Nutcracker	**(1)** (ii) .....

Figure 6

(b) Figure 7 shows a loaded wheelbarrow.

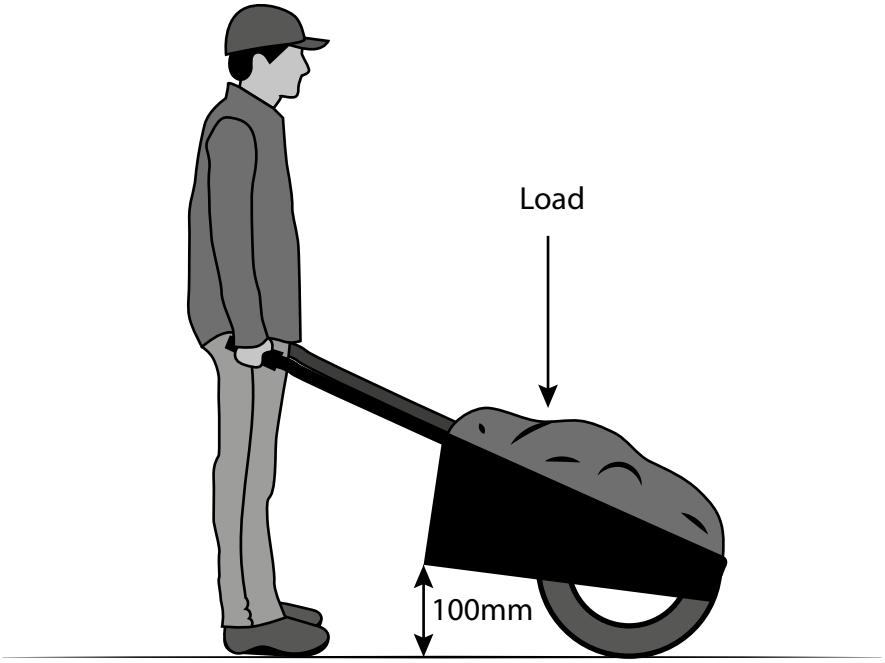

Figure 7

Mechanical advantage (MA) is calculated by:

$$MA = \frac{\text{load}}{\text{effort}}$$

The velocity ratio (VR) is 4 and the effort is 100 N.

The efficiency of the system is given by:

$$\text{Efficiency} = \frac{MA}{VR} \times 100\%$$

The system is 85% efficient.

Calculate the maximum load that can be lifted.

(3)

..... N

(c) Explain **one** reason why the length of the handles on the wheelbarrow would be increased.

(2)

.....

.....

.....

.....

(d) Explain **two** benefits that just-in-time (JIT) manufacturing could have for the manufacturer of the wheelbarrow.

(4)

1 .....

.....

.....

2 .....

.....

.....

(Total for Question 3 = 11 marks)

4 Figure 8 shows a gate.

The gate is moved by an electric motor in combination with a rack and pinion mechanism.

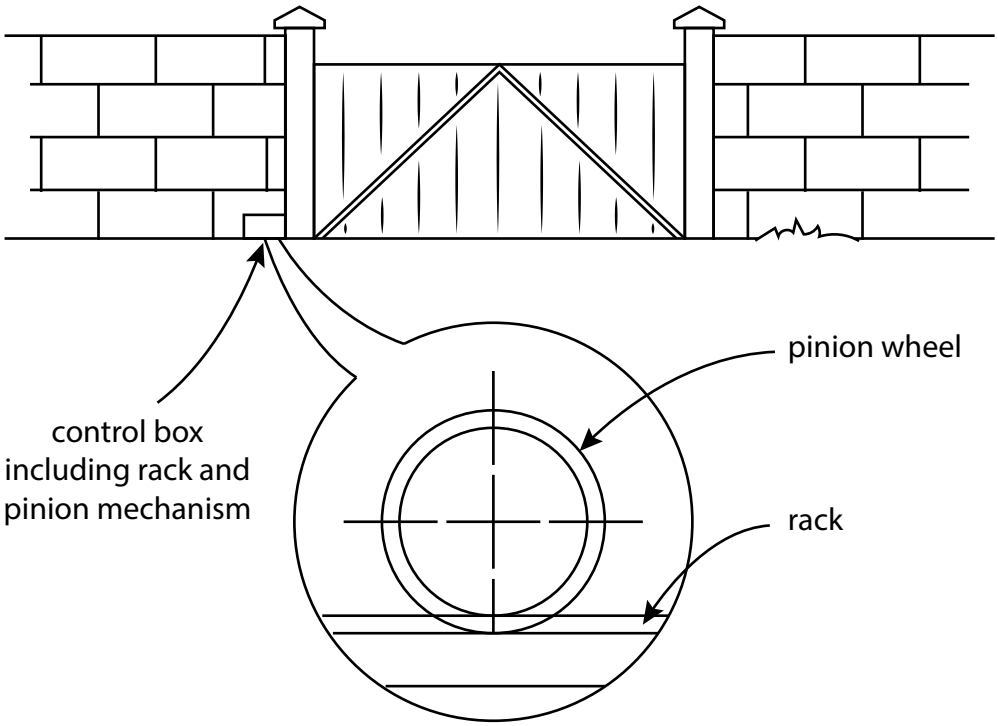

Figure 8

(a) Give **one** other application of a rack and pinion mechanism.

(1)

.....

(b) The gate needs to move 3 m to open fully.

The pinion wheel has a radius of 60 mm.

Calculate the number of revolutions the pinion wheel must rotate in order to open the gate fully.

Give your answer to the nearest whole number.

(4)

Use $\pi = 3.142$

Formula for circumference = πd

.....

(c) Figure 9 shows a graph of the approximate number of people employed in solar-power-related industries between 2012 and 2016.

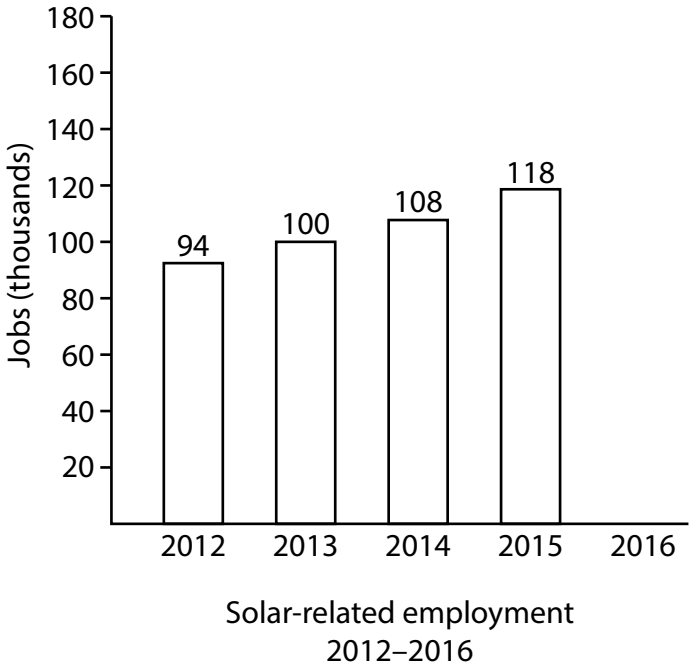

Figure 9

Analyse the graph.

Calculate the expected increase in the number of people employed in solar-power related industries in 2016, based on the current trend.

(1)

increase = ...

(d) The manufacturer considered two different power supplies to power the electric gates.

Figure 10 shows data for these power supplies.

Factor	Solar	Mains electricity
Storage method	Battery	None required on National Grid
Upfront costs	£6000	Nil
Cost per kwh	Nil	9.596 pence
Annual standing charge	Nil	£116

Figure 10

Analyse the data provided.

Discuss the issues that the manufacturer would need to consider when making the decision about which power supply to choose.

(6)

.....

.....

.....

.....

.....

.....

.....

.....

.....

.....

.....

.....

(Total for Question 4 = 12 marks)

TOTAL FOR SECTION A = 40 MARKS

SECTION B – POLYMERS

Answer ALL questions. Write your answers in the spaces provided.

5 Figure 11 shows a design solution and some additional information for a mobile phone holder.

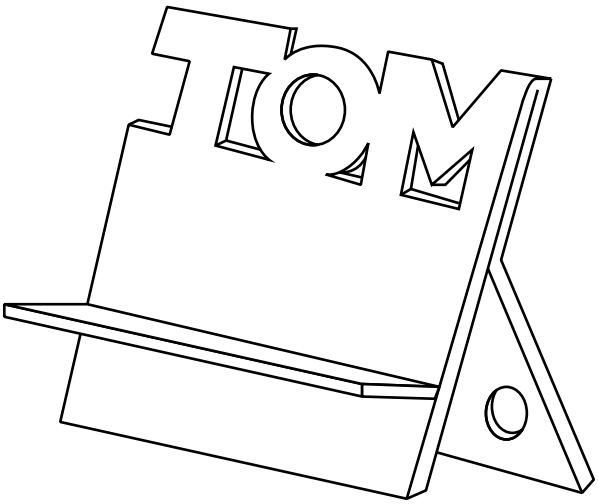

Additional information

Dimensions for mobile phone

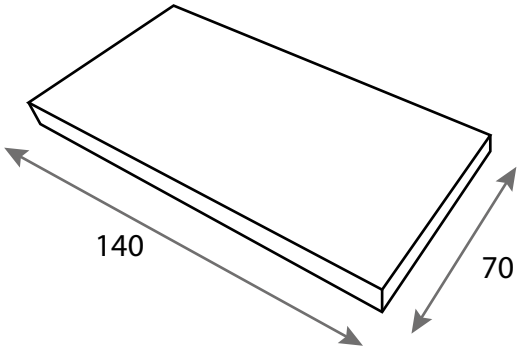

All dimensions are in millimetres.

Figure 11

(a) The mobile phone holder needs to be improved to include the following specification points.

The mobile phone holder must:

- include an area to keep small items securely
- display the name 'CoolStuff' so it is easily visible, using a batch-produced process
- be collapsible so it can be sold flat pack.

Use notes and/or sketches to show how the mobile phone holder could be modified to include these three specification points.

You will be marked on how you apply your understanding of design and technology, not your graphical skills.

Use the outline of the original design solution to show your modifications.

(6)

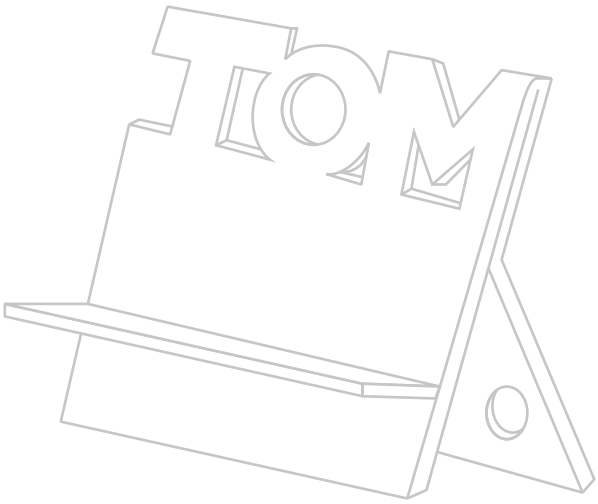

(b) Figure 12 shows a mobile phone charging station.

The mobile phone charging station must hold a watch securely.

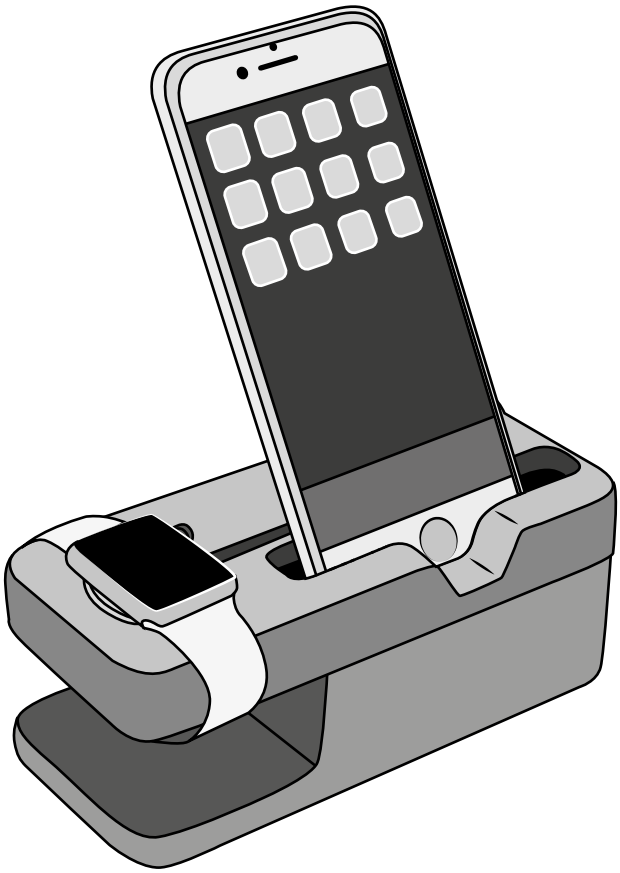

Figure 12

Analyse the mobile phone charging station.

Explain **two** ways the mobile phone charging station meets or fails to meet the criterion of holding a watch securely.

(4)

1 .....

.....

.....

.....

2 .....

.....

.....

.....

(Total for Question 5 = 10 marks)

6 Figure 13 shows an extreme-sports camera.

The extreme-sports camera is made as a one-off prototype.

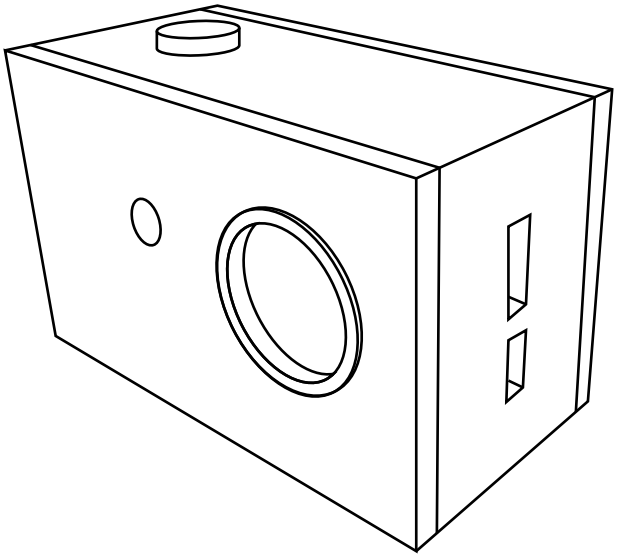

Figure 13

(a) (i) Explain **one** reason why a twist drill would be used in the manufacture of the extreme-sports camera.

(2)

.....

.....

.....

.....

(ii) Explain **one** reason why a coping saw would be used in the manufacture of the extreme-sports camera.

(2)

.....

.....

.....

.....

(b) Figure 14 shows a camera.

The case of the camera is injection moulded from polystyrene.

Figure 14

Use notes and/or sketches to show the process of injection moulding the camera case.

You will be marked on how you apply your understanding of design and technology, not your graphical skills.

(4)

(c) Figure 15 shows the clamp for the camera and the thumbscrew.

thumbscrew clamp enlarged thumbscrew

Figure 15

Explain **one** reason why the thumbscrew of the clamp was shaped.

(2)

.....

.....

.....

.....

(d) The camera is going to be mass produced.

After manufacture the cameras are prepared for packaging.

Figure 16 shows the camera packaging.

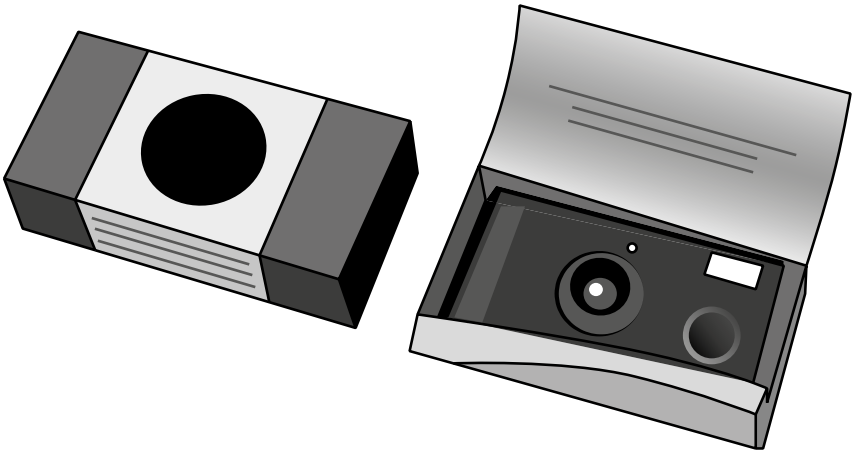

Figure 16

Name **two** methods that could be used to mass produce the packaging for the camera.

For each method, explain one advantage to the manufacturer of using this method.

(6)

Method 1

.....

Explanation

.....

.....

.....

.....

.....

Method 2

.....

Explanation

.....

.....

.....

.....

.....

(Total for Question 6 = 16 marks)

BLANK PAGE

7 Figure 17 shows a kayak.

A kayak is used as a method of travel across water, aided by paddling with an oar.

(Source: © technotr/iStock)

Figure 17

(a) Give **one** method of making the kayak's shape stronger.

(1)

.....

(b) The oar paddle is manufactured by injection moulding.

Explain **two** reasons for using polyethylene granules rather than polyester resin.

(4)

1 .....

.....

.....

.....

2 .....

.....

.....

.....

(c) Figure 18 shows the plan view of the kayak.

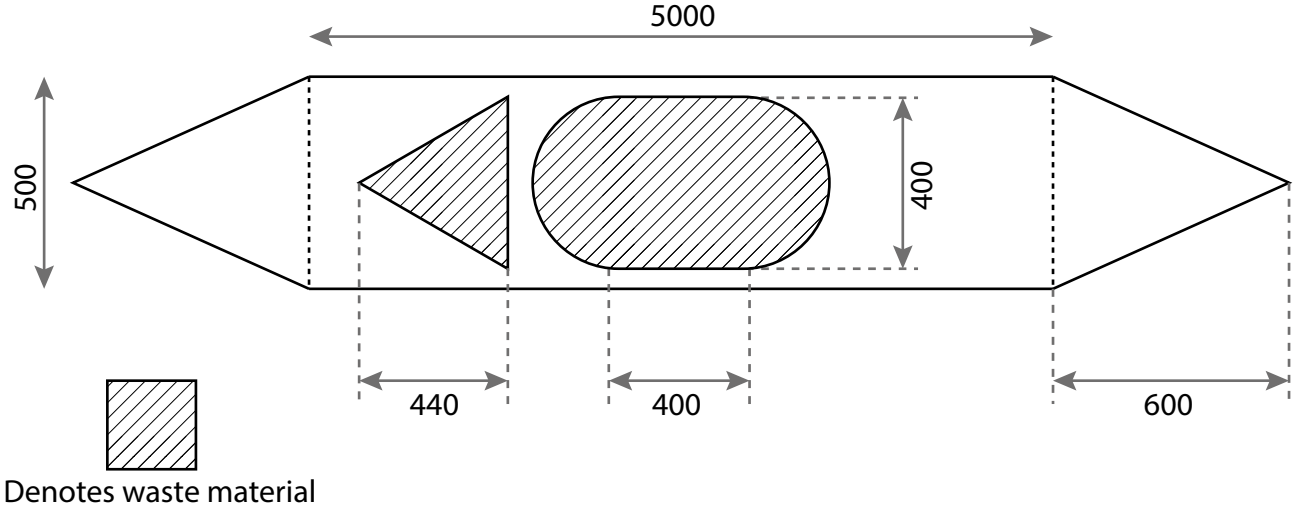

All dimensions are in millimetres.

Figure 18

Calculate how much polyethylene is wasted from the whole piece, in cm2.

Give your answer to 2 decimal places.

Area of a circle = $\pi \times r^2$

Area of a triangle = ½ × base × height

Use $\pi = 3.142$

(5)

.....cm²

(d) Explain **two** reasons why carbon fibre reinforced plastic (CRP) is an appropriate material for manufacturing the kayak.

(6)

1 .....

.....

.....

.....

.....

.....

2 .....

.....

.....

.....

.....

(Total for Question 7 = 16 marks)

8 Figure 19 shows a pair of moulded polymer football boots.

The boot has been finished by laser engraving the player's initials on.

Figure 19

(a) (i) Explain **one** reason why a laser was used as a finishing process.

(2)

.....

.....

.....

.....

(ii) Figure 20 shows some football boot studs.

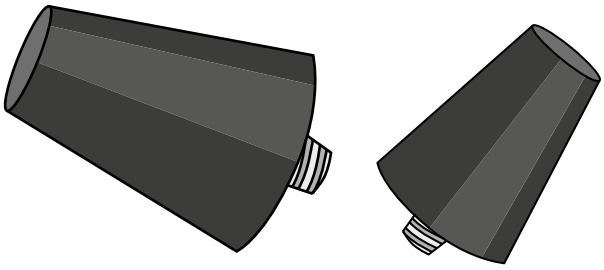

Figure 20

Explain **one** working property of polyurethane that makes it suitable for the football boot studs.

(3)

.....

.....

.....

.....

.....

.....

(b) Explain **two** quality-control checks that would be carried out on the sole during the manufacturing process.

(4)

1 .....

.....

.....

.....

2 .....

.....

.....

.....

(c) The moulded football boots are sold in the UK.

Figure 21 shows information about the moulded football boots.

Upper	Leather/synthetic fibres
Sole	Carbon fibre
Studs	Polyurethane
Cost	£50
Colour	Black, orange, red, blue, green

Figure 21

Analyse the information in Figure 21.

Evaluate the football boots with reference to their cultural and ethical factors.

(9)

.....

.....

(Total for Question 8 = 18 marks)

TOTAL FOR SECTION B = 60 MARKS
TOTAL FOR PAPER = 100 MARKS

Component 1 mark scheme – 1DT0/1C

Section A – Core content

Question number	Answer	Mark
1(a)(i)	Any **one** property from: • lightweight (1) • soft (1) • low density (1).	**(1)**

Question number	Answer	Mark
1(a)(ii)	Any **one** property from: • ductile (1) • malleable (1) • non-corrosive/will not rust (1) • non-reactive with paint (1).	**(1)**

Question number	Answer	Mark
1(a)(iii)	Any **one** property from: • waterproof (1) • plasticity (1) • electrical insulator (1).	**(1)**

Question number	Answer	Mark
1(a)(iv)	Any **one** property from: • lightweight (1) • soft (1) • good water resistance/hydrophobic (1) • good insulator of heat (1)	**(1)**

Question number	Answer	Additional guidance	Mark
1(b)	Any **one** explanation that includes a method of use (1) and a linked justification of that use (1). • The temperature-responsive polymers could give an indication of when it is safe to drink (1) as they will change colour when hot/cool (1). • The temperature-responsive polymers can be used as an aesthetic feature (1), as any logos/images will change colour when hot/cool (1).	Do not award a single mark for simply saying 'they could be used'.	**(2)**

Question number	Answer	Mark
1(c)	**Marks will be awarded for understanding of design and technology, not graphical skills.** Notes and/or sketches that include: • flat linerboard/outer/inner surface (1) • fluted corrugated sheet (1). Example of candidate response: 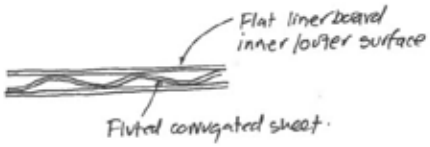	**(2)**

Question number	Answer	Mark
2(a)	Any **one** explanation that includes a benefit (1) and a linked justification of that benefit (1). • MDF is made from waste material (1), therefore the waste will not need to go to landfill/be dumped (1). • Using MDF will reduce the amount of natural timber being consumed/cut down (1), therefore pine as a natural resource will last longer/be put to better use (1).	**(2)**

Question number	Answer	Additional guidance	Mark
2(b)	A calculation that includes: • conversion of units (1) • correct number of whole pieces by dimension (1) • correct sum (1). 300 mm = 30 cm (1) $\frac{61}{30}$ = 2 whole cuts $\frac{122}{30}$ = 4 whole cuts (1) 2 × 4 = 8 whole cuts (1)	Award full marks for correct numerical answer without working. Allow ecf if candidate gets part of calculation wrong.	**(3)**

Question number	Answer	Mark
2(c)	Any **one** explanation that includes an advantage (1) and a linked justification of that advantage (1). • Blended fibres combine the properties of the original fibres (1), therefore the properties can be improved/enhanced (1). • Combing/blending fibres allows cheaper fibres to be incorporated (1), therefore the overall cost of the fabric will be reduced (1). • The appearance/performance of the fabric can be improved/enhanced (1), therefore it is more attractive/appealing to the end user (1). Do not accept cheap on its own, unless qualified.	**(2)**

Question number	Answer	Mark
2(d)	Any **one** explanation that includes a benefit (1) and a linked justification of that benefit (1). • They will/may not be able to make the clock mechanism themselves (1), therefore they do not need to invest in specialist machinery/training/workforce (1). • They will be made by a specialist (1), therefore they will come with a guarantee/ensure quality (1).	**(2)**

Question number	Answer	Mark
3(a)(i)	Type 3	**(1)**

Question number	Answer	Mark
3(a)(ii)	Type 2	**(1)**

Question number	Answer	Additional guidance	Mark
3(b)	A calculation that includes: • transposition of formula and calculation to show MA ÷ VR = 0.85 (1) • transposition of formula to show MA = 3.4 (1) • transposition of MA formula and calculation of load = 340 N (1). Efficiency = $\frac{MA}{VR} \times 100\%$ $\frac{MA}{VR} = 0.85$ (1) VR × 0.85 = MA VR = 4 MA = 4 × 0.85 = 3.4 (1) Effort = 100 MA = $\frac{load}{effort}$ 3.4 = $\frac{load}{100}$ load = 100 × 3.4 = 340 N (1)	Award full marks for correct numerical answer without working. Allow ecf if candidate gets part of calculation wrong.	**(3)**

Question number	Answer	Mark
3(c)	Any **one** explanation that includes a benefit (1) and a linked justification of that benefit (1). • This will increase the mechanical advantage (1), therefore making it easier to lift the wheelbarrow (1). • A greater load/weight can be lifted (1) because there is greater leverage (1).	**(2)**

Question number	Answer	Mark
3(d)	Any **two** explanations that include a benefit (1) and a linked justification of that benefit (1). • They will have much less material in stock (1), therefore they have less money tied up/invested in materials they are not using (1). • They do not have to employ staff on permanent contracts (1), therefore they can employ staff as and when required, reducing the wage bill (1). • Once the wheelbarrows have been manufactured they are shipped out (1), therefore no expensive storage/warehouse required.	**(4)**

Question number	Answer	Mark
4(a)	Any **one** application from: • steering mechanism (1) • slush/lock gate (1) • pillar drilling machine (1) • lathe bed/saddle slide (1).	**(1)**

Question number	Answer	Additional guidance	Mark
4(b)	A calculation that includes: • calculation of circumference (1) • conversion of units: 3 m to 3000 mm (1) • correct sum = 7.96 (1) • 8 whole turns (1). $C = \pi d$ = 3.142 × 120 = 377.04 mm (1) 3 m = 3000 mm (1) $\frac{3000}{377.04} = 7.96$ (1) = 8 whole turns (1)	Award full marks for correct numerical answer without working. Allow ecf if candidate gets part of calculation wrong.	**(4)**

Question number	Answer	Mark
4(c)	12/12 thousand/12 000	**(1)**

Question number	Indicative content	Mark
4(d)	**AO3 (6 marks)** • Solar power is expensive to set up. • Solar power is free once installed. • Limited by sunlight hours. • Batteries lose ability to charge/recharge over time. • Mains power incurs a flat fee every year even if you do not use it. • Every time you open/close the gates it will cost you money if using mains power. • Power lines can be blown down in the wind, which means you cannot operate the gate in a power cut, therefore you may be shut in/out of your house. • Installing power lines is very expensive in remote areas, which means it might be prohibitively expensive to install them, therefore making solar power a more viable option. • If the solar exposure is low the batteries might not charge up enough, which means there might not be sufficient power to open/close the gates. • The standing charge is a flat fee that has to be paid, which means if you are away for a long period of time and do not use the gates, you still have to pay the charge, which will be a waste of money.	**(6)**

Level	Mark	Descriptor
	0	No rewardable material.
Level 1	1–2	• Attempts to interrogate and deconstruct information but connections and logical chains of reasoning are flawed. • An unbalanced appraisal of the information/issues, containing judgements that show a limited awareness of the interrelationships between factors or competing arguments.
Level 2	3–4	• Interrogates and deconstructs information and provides some connections and logical chains of reasoning. • A balanced appraisal of the information/issues, containing judgements that show an awareness of the interrelationships between factors or competing arguments.
Level 3	5–6	• Interrogates and deconstructs information and provides sustained connections and logical chains of reasoning. • A well-balanced appraisal of the information/issues, containing judgements that show a thorough awareness of the interrelationships between factors or competing arguments.

Section B – Polymers

Question number	Answer	Mark
5(a)	**Marks will be awarded for understanding of design and technology, not graphical skills.** Notes and/or sketches that include: • an area to keep small items (1) securely (1), e.g. addition of shelf with front and side walls/not too large/lid • displaying the name 'CoolStuff' so it is easily visible (1) using a batch-produced process (1), e.g. display the name 'CoolStuff' large enough to be seen/not obstructed by the mobile phone/stickers/labels/engraved/laser cut/CNC machinery • being collapsible (1) so it can be sold flat pack (1), e.g. collapsible hinge/live hinge/flexible material/shown as flat pack. Example of candidate response: 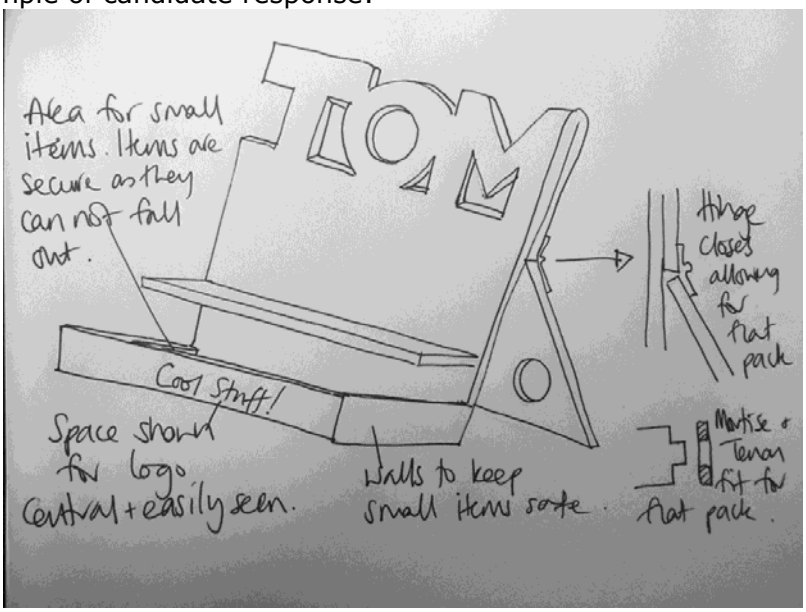 Annotated notes: Area for small items. Items are secure as they cannot fall out. Hinge closes, allowing for flat pack. Mortise and tenon fit for flat pack. Walls to keep small items safe. Space shown for logo central and easily seen.	(6)

Question number	Answer	Mark
5(b)	Any **two** explanations that include a way (1) and a linked justification of that way (1). • The shelf is made to the correct dimensions of the watch (1), which allows the watch to wrap around it and provide a tight fit/keep the watch strap taut so that it will not fall off, therefore meeting the design criterion (1). • The shelf is deep enough to hold the watch (1), which means that the watch is able to fit on the shelf without any part of it hanging off so that it keeps the watch safely in place (1).	(4)

Question number	Answer	Mark
6(a)(i)	Any **one** explanation that includes a reason (1) and a linked justification of that reason (1). • Drill bits create round holes (1), therefore round components will fit into the holes (1). • Drill bits come in pre-set sizes (1), therefore all holes can be the same size (1). • Chain drill slots in plastic (1), which can be filed smooth (1).	**(2)**

Question number	Answer	Mark
6(a)(ii)	Any **one** explanation that includes a reason (1) and a linked justification of that reason (1). • The coping saw has a thin blade and can be manoeuvred easily (1), therefore it can be used to cut the shape of the features that have curves (1). • The coping saw has a thin blade (1), therefore it can cut easily through the material (1).	**(2)**

Question number	Answer	Mark
6(b)	**Marks will be awarded for understanding of design and technology, not graphical skills.** Notes and/or sketches that include: • plastic granules placed in hopper (1) • Archimedes screw moves granules towards the mould/granules become plasticised under heat (1) • hydraulic ram pushes plastic into the mould (1) • camera case ejected from the mould (1). Example of candidate response: 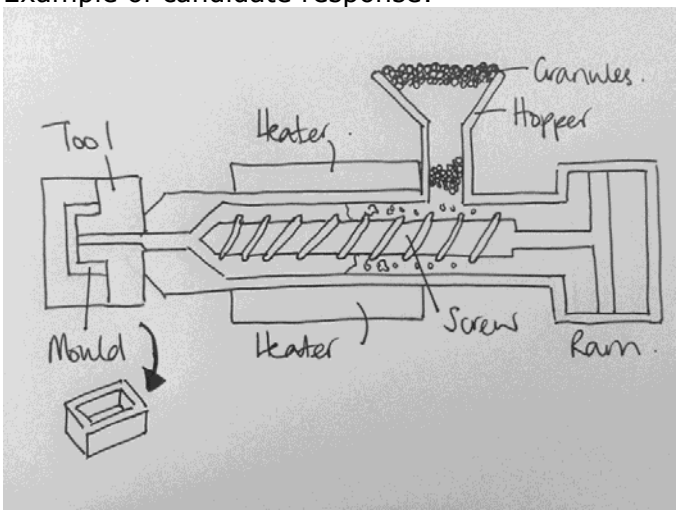 Annotated notes: Tool, Heater, Granules, Hopper, Ram, Screw, Heater, Mould.	**(4)**

Question number	Answer	Mark
6(c)	Any **one** explanation that includes a reason (1) and a linked justification of that reason (1). • The thumbscrew was designed for fingers to grip (1), therefore allowing the thumbscrew to be turned easily (1). • The thumbscrew is ergonomically designed (1), therefore it fits the user's fingers comfortably (1).	**(2)**

Question number	Answer	Mark
6(d)	Any **two** explanations that include a way (1), plus **two** linked justifications of that way (1) + (1). • A plastic net can be made using a laser cutter/plotter cutter (1), the net can be used to cut out all the shapes (1), therefore the shape will be exactly the same every time (1). • The vacuum-forming process can be used for mass production (1) so expensive machinery is not needed (1), therefore reducing production costs (1).	**(6)**

Question number	Answer	Mark
7(a)	Any **one** method from: • adding ribs (1) • thicker walls (1) • frame structure (1) • additives into the polymer (1).	**(1)**

Question number	Answer	Mark
7(b)	Any **two** explanations that include a reason (1) and a linked justification of that reason (1). • Polyethylene is a thermoplastic (1), which means it can be heated/softened before being injected into the mould where it will harden as it cools (1). • Polyester resin is a liquid that needs some form of fibre/matrix material being added to it (1), which is not possible during the injection moulding process (1). • Polyester resin is a thermosetting polymer (1), which means it is not capable of being reheated for the moulding process (1).	**(4)**

Question number	Answer	Additional guidance	Mark
7(c)	A calculation that includes: • conversion of units from mm to cm before further calculations • calculation of total area = 25 300 cm^2 (1) • calculation of area used: area of square = 1600 cm^2 (1) area of triangle = 880 cm^2 (1) area equivalent to 1 full circle = 1256.8 cm^2 (1) • total area wasted given to 2 d.p.: total area – total area used = 21 563.20 cm^2 (1).	Do not award the final mark if the answer is not in mm^2. Award full marks for correct numerical answer without working. Allow ecf if candidate gets part of calculation wrong.	**(5)**

Question number	Answer	Mark
7(d)	Any **two** explanations that include a reason (1), plus **two** linked justifications of that reason (1) + (1). • CRP is a lightweight material (1), which means the kayak has less mass (1) enabling the paddler to move faster through the water (1). • CRP is waterproof (1), which means it will not absorb any water (1), therefore not suffering any degradation/damage as a result of being in the water (1). • CRP is a tough material (1), which means it is capable of withstanding knocks and bumps (1) and therefore will not get damaged if it bumps/knocks into other kayaks/river banks (1). • CRP can be moulded into any shape (1), which means it can be formed via moulding into smooth shapes (1) and so smooth aerodynamic shapes can be achieved/drag reduced (1).	**(6)**

Question number	Answer	Mark
8(a)(i)	Any **one** explanation that includes an advantage (1) and a linked justification of that advantage (1). • The laser can be programmed to burn at different rates/speeds (1), which means different textures/patterns can be achieved (1). • The laser can be used to create a one-off design (1), which makes each boot/pair of boots unique (1).	**(2)**

Question number	Answer	Mark
8(a)(ii)	Any **one** explanation that includes a working property (1), plus **two** linked justifications of that working property (1) + (1). • Polyurethane has good hardness/abrasion resistance (1), which means that it will not scratch/wear easily (1), therefore the stud will be more durable (1). • Polyurethane has good tensile strength (1), which means that it will not fracture (1), therefore the studs would not be pulled apart from the sole when the player is involved in any dynamic movements (1). • Polyurethane has good compressive strength (1), which means that it can be used under a heavy weight or impact (1), therefore the studs will not break off (1).	**(3)**

Question number	Answer	Mark
8(b)	Any **two** explanations that include a quality-control check (1) and a linked justification of that quality-control check (1). • The sole is bent under pressure (1), therefore making sure that it does not deform without fracturing/breaking (1). • The sole is twisted from side to side (1), therefore making sure the sole has full working movement and will not fracture (1). • The boots would be measured/dimensions checked/use of 'go and no-go gauges' (1) therefore ensuring that the boots were the right size/within tolerance (1)	**(4)**

Question number	Indicative content	Mark
8(c)	**AO3 (9 marks)** Able to make comparisons between the data in the table with respect to: • better quality materials will mean that the product is of a better quality and will last longer • more expensive materials will mean a more expensive product, which might be difficult for parents to afford • expensive football boots give the impression they are better/last longer • cheaper football boots will attract repeat sales • buying materials in bulk will mean that the materials are cheaper, which means that savings can be passed on to the consumer • mass producing the boot will be cheaper over time because the cost of the tooling will be spread over the large number of football boots, bringing the cost of the football boot down • moulded studs have to last a long time so will have to be durable • football boot studs will wear out and will therefore new boots will need to be purchased.	**(9)**

Level	Mark	Descriptor
	0	No rewardable material.
Level 1	1–3	• Attempts to interrogate and deconstruct information but connections and logical chains of reasoning are flawed. • An unbalanced appraisal of the information/issues, containing judgements that show a limited awareness of the interrelationships between factors or competing arguments. • A conclusion may be presented but it is likely to be generic assertions rather than supported by relevant judgements.
Level 2	4–6	• Interrogates and deconstructs information and provides some connections and logical chains of reasoning. • A balanced appraisal of the information/issues, containing judgements that show an awareness of the interrelationships between factors or competing arguments. • A conclusion is presented that is partially supported by relevant judgements.
Level 3	7–9	• Interrogates and deconstructs information and provides sustained connections and logical chains of reasoning. • A well-balanced appraisal of the information/issues, containing judgements that show a thorough awareness of the interrelationships between factors or competing arguments. • A conclusion is presented that is fully supported by relevant judgements.

Write your name here

Surname	Other names

Pearson Edexcel
Level 1/Level 2 GCSE (9–1)

Centre Number | Candidate Number

Design and Technology

Component 1

Sample assessment material for first teaching
September 2017
Time: 1 hour 45 minutes

Paper Reference
1DT0/1D

You must have:
a calculator
a ruler

Total Marks

Instructions

- Use **black** ink or ball-point pen.
- **Fill in the boxes** at the top of this page with your name, centre number and candidate number.
- Answer **all** questions.
- Answer the questions in the spaces provided – *there may be more space than you need.*
- Any diagrams may NOT be accurately drawn, unless otherwise indicated.
- You must **show all your working out** with **your answer clearly identified** at the **end of your solution**.

Information

- The total mark for this paper is 100.
- The marks for **each** question are shown in brackets – *use this as a guide as to how much time to spend on each question.*

Advice

- Read each question carefully before you start to answer it.
- Try to answer every question.
- Check your answers if you have time at the end.

Turn over

S55252A

1/1

S 5 5 2 5 2 A 0 1 2 8

Pearson

SECTION A – CORE

Answer ALL questions. Write your answers in the spaces provided.

1 The materials that products are made from are chosen because of their characteristics.

(a) Figure 1 shows a table of products.

For each of the products shown, give a property of the material it is made from that makes the material suitable for the product.

The first one has been done for you.

Picture of product	Description of product	Property
 (Source: © Feng Yu/Shutterstock)	A polystyrene coffee cup	Good insulator of heat
 (Source: © 3DMAVR/Shutterstock)	A balsawood toy boat	(1) (i) .....
 (Source: © Anteromite/Shutterstock)	An aluminium paint tube	(1) (ii) .....
 (Source: © Morphart Creation/Shutterstock)	An acrylic bath	(1) (iii) .....

Picture of product	Description of product	Property
 (Source: © Borislav Bajkic/Shutterstock)	A fleece hat	(1) (iv) .....

Figure 1

(b) Figure 2 shows a coffee cup.

The manufacturers of the cup want to improve it by using temperature-responsive polymers.

(Source: © Feng Yu/Shutterstock)

Figure 2

Explain how temperature-responsive polymers could be used to improve the coffee cup.

(2)

.....

.....

.....

.....

(c) Figure 3 shows a cardboard sleeve around a coffee cup.

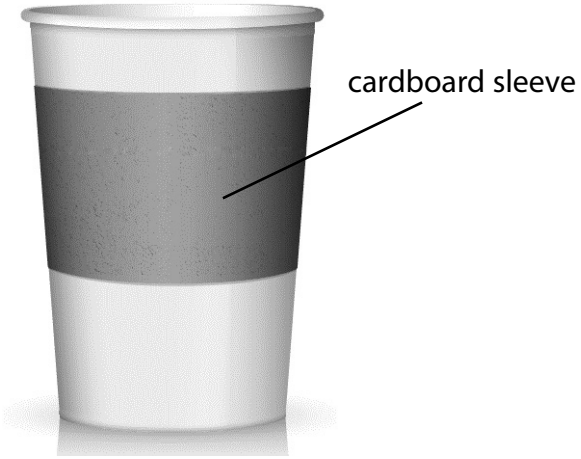

(Source: © Walking-onstreet/Shutterstock)

Figure 3

The sleeve is manufactured from corrugated cardboard.

Use notes and/or sketches to show the construction of corrugated cardboard.

You will be marked on how you apply your understanding of design and technology, not your graphical skills.

(2)

(Total for Question 1 = 8 marks)

2 Figure 4 shows an MDF square.

The MDF square will be covered with fabric to make a wall clock.

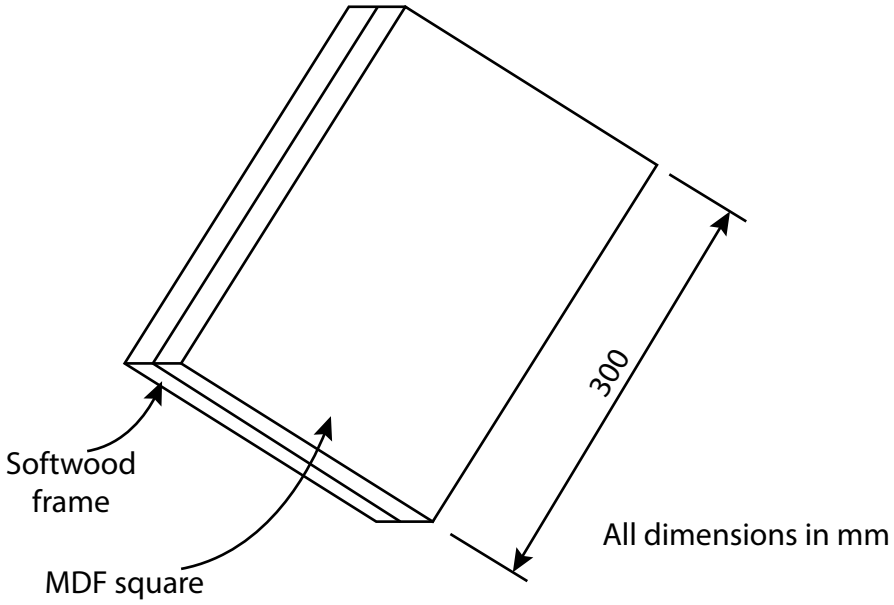

Figure 4

(a) Explain **one** benefit for the environment of using MDF rather than pine to make the wall clock.

(2)

.....

.....

.....

.....

(b) MDF is available in 61 cm × 122 cm sheets.

Calculate how many 300 mm × 300 mm squares can be cut from the available sheet.

(3)

.....

(c) The clock face is covered with a blended fibre fabric.

Explain **one** advantage of blending fibres to make fabrics.

(2)

.....

.....

.....

.....

(d) Figure 5 shows a clock mechanism.

(Source: www.clockparts.co.uk)

Figure 5

Explain **one** benefit to the clock manufacturer of buying the clock mechanisms as standard components.

(2)

.....

.....

.....

.....

(Total for Question 2 = 9 marks)

3 Levers are classified as class 1, 2 or 3.

(a) Figure 6 shows two different products, both are types of lever.

F is the fulcrum, E is the effort and L is the load.

For each of the products shown, name the type of lever.

Product	Type of lever
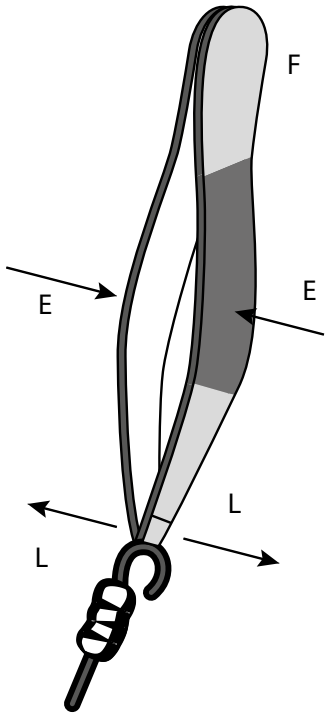 Tweezers	**(1)** (i) .....
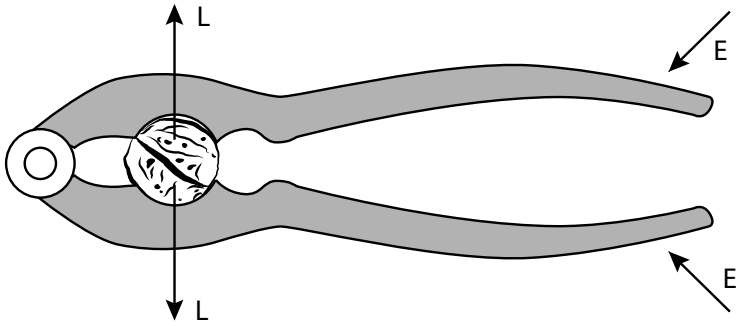 Nutcracker	**(1)** (ii) .....

Figure 6

(b) Figure 7 shows a loaded wheelbarrow.

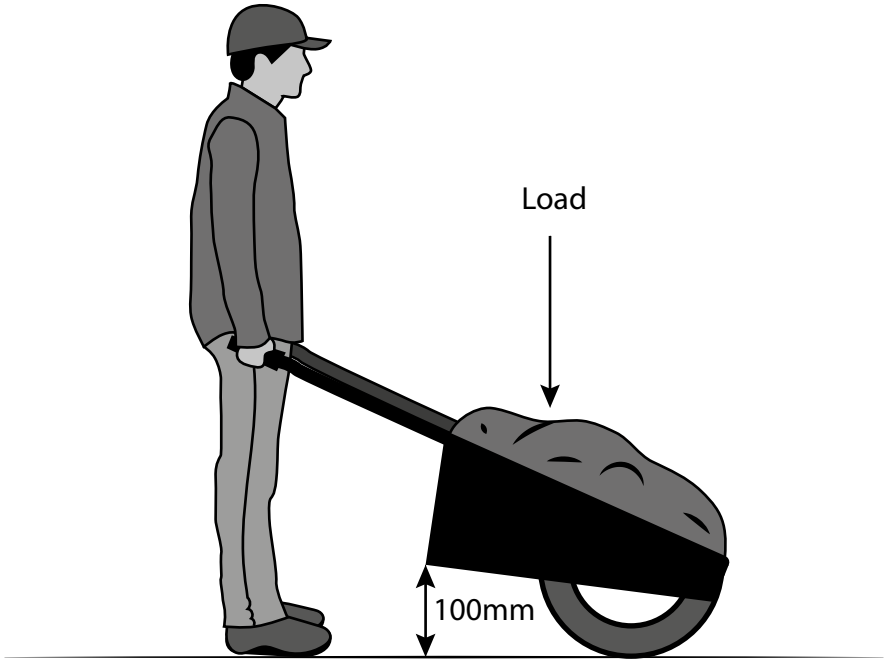

Figure 7

Mechanical advantage (MA) is calculated by:

$$MA = \frac{\text{load}}{\text{effort}}$$

The velocity ratio (VR) is 4 and the effort is 100 N.

The efficiency of the system is given by:

$$\text{Efficiency} = \frac{MA}{VR} \times 100\%$$

The system is 85% efficient.

Calculate the maximum load that can be lifted.

(3)

..... N

(c) Explain **one** reason why the length of the handles on the wheelbarrow would be increased.

(2)

.....

.....

.....

.....

(d) Explain **two** benefits that just-in-time (JIT) manufacturing could have for the manufacturer of the wheelbarrow.

(4)

1 .....

.....

.....

2 .....

.....

.....

(Total for Question 3 = 11 marks)

4 Figure 8 shows a gate.

The gate is moved by an electric motor in combination with a rack and pinion mechanism.

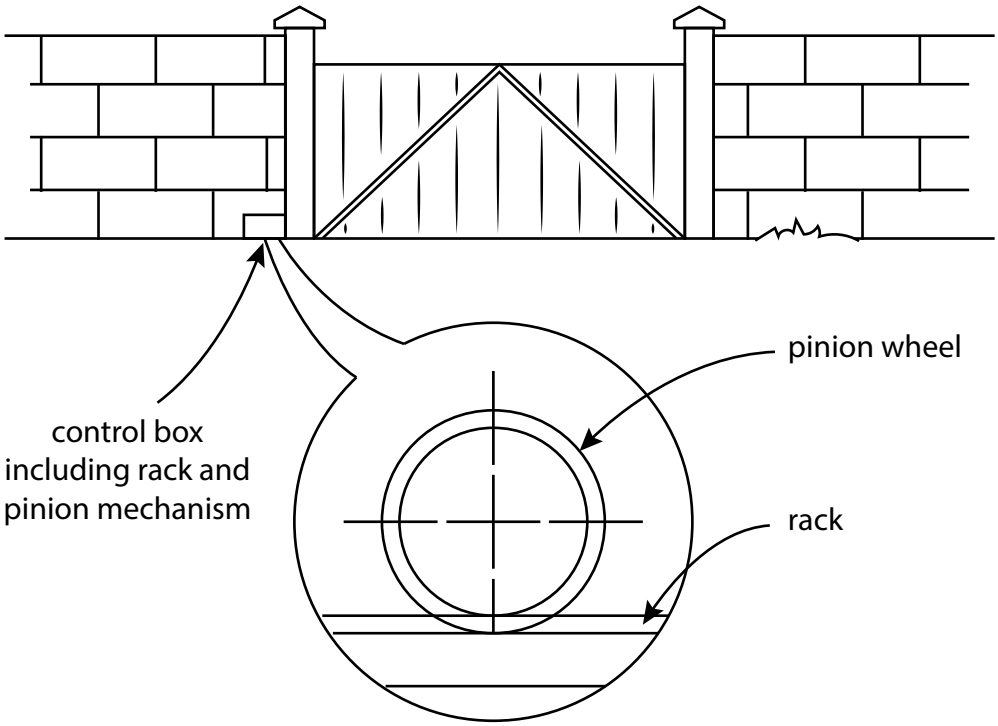

Figure 8

(a) Give **one** other application of a rack and pinion mechanism.

(1)

.....

(b) The gate needs to move 3 m to open fully.

The pinion wheel has a radius of 60 mm.

Calculate the number of revolutions the pinion wheel must rotate in order to open the gate fully.

Give your answer to the nearest whole number.

(4)

Use $\pi = 3.142$

Formula for circumference = πd

.....

(c) Figure 9 shows a graph of the approximate number of people employed in solar-power-related industries between 2012 and 2016.

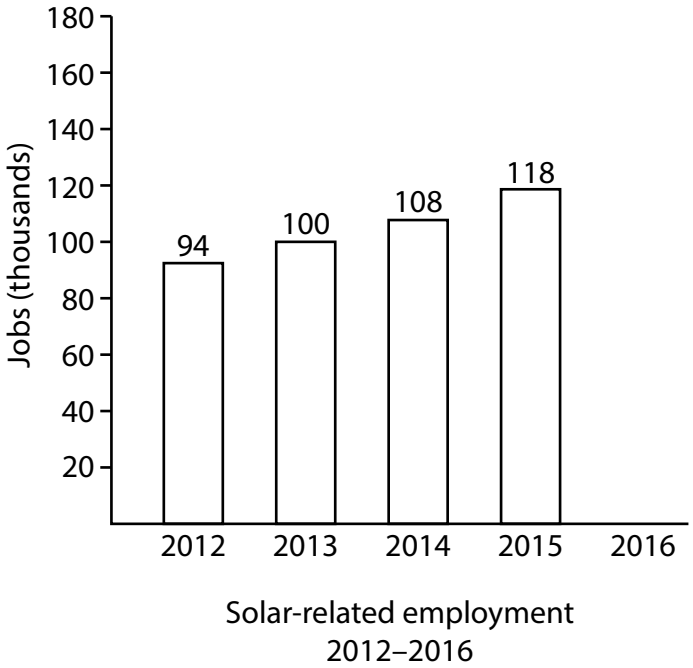

Figure 9

Analyse the graph.

Calculate the expected increase in the number of people employed in solar-power related industries in 2016, based on the current trend.

(1)

increase = ...

(d) The manufacturer considered two different power supplies to power the electric gates.

Figure 10 shows data for these power supplies.

Factor	Solar	Mains electricity
Storage method	Battery	None required on National Grid
Upfront costs	£6000	Nil
Cost per kwh	Nil	9.596 pence
Annual standing charge	Nil	£116

Figure 10

Analyse the data provided.

Discuss the issues that the manufacturer would need to consider when making the decision about which power supply to choose.

(6)

.....

.....

.....

.....

.....

.....

.....

.....

.....

.....

.....

.....

(Total for Question 4 = 12 marks)

TOTAL FOR SECTION A = 40 MARKS

SECTION B – SYSTEMS

Answer ALL questions. Write your answers in the spaces provided.

5 Figure 11 shows a design solution and some additional information for a new light sensing microcontroller circuit, for an automatic night light.

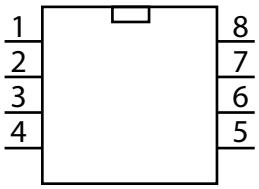

The GENIE 08 microcontroller has 8 legs (known as pins) and these are used as follows:

Pin	Description
1	Power supply voltage (1.8–5.5V only)
2	Programming input (PR)
3	Analogue input A4 or digital in/out G4
4	Digital input G3 or (optional) reset
5	Analogue input A2 or digital in/out G2
6	Analogue input A1 or digital in/out G1
7	Digital output G0 and Status output (ST)
8	Ground (zero volt) supply voltage

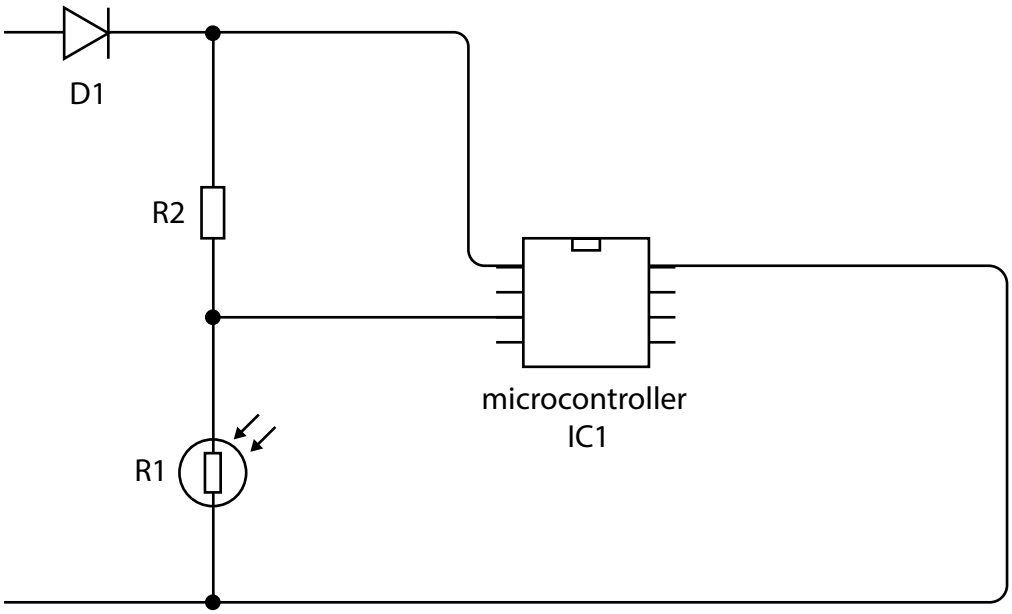

Figure 11

(a) The circuit needs to be improved to include the following specification points.

The circuit must:

- have an on/off switch that latches
- be connected to the correct supply voltage and 0V
- have an LED output, connected to the microcontroller correctly, to indicate when light levels change.

Use notes and/or sketches to show how the circuit could be modified to include these three specification points.

You will be marked on how you apply your understanding of design and technology, not your graphical skills.

Use the outline of the original design solution to show your modifications.

(6)

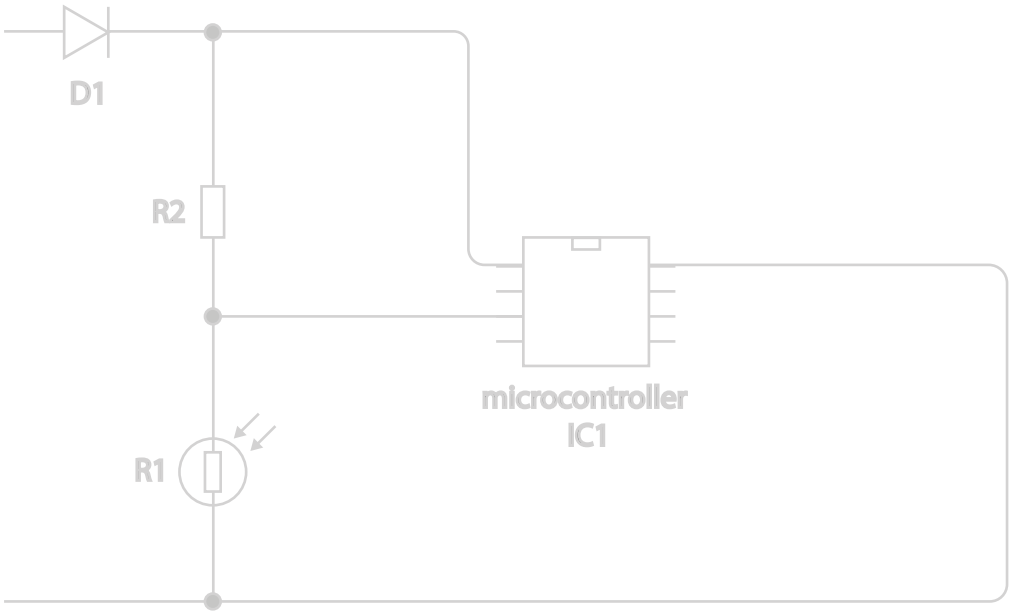

(b) Figure 12 shows a night light and some information about it.

The night light must be suitable for children to use and take to bed.

Synthetic rubber night light	LED lighting
30-minute auto off	Free of phthalates, lead and BPA
Runs for six months on rechargeable batteries	Inductive charger

Figure 12

Analyse the night light.

Explain two ways in which the night light meets or fails to meet the criteria for children to use it and take it to bed.

(4)

1 .....

.....

.....

.....

2 .....

.....

.....

.....

(Total for Question 5 = 10 marks)

6 Figure 13 shows a prototype for a new circuit.

The circuit is made as a one-off prototype on a breadboard.

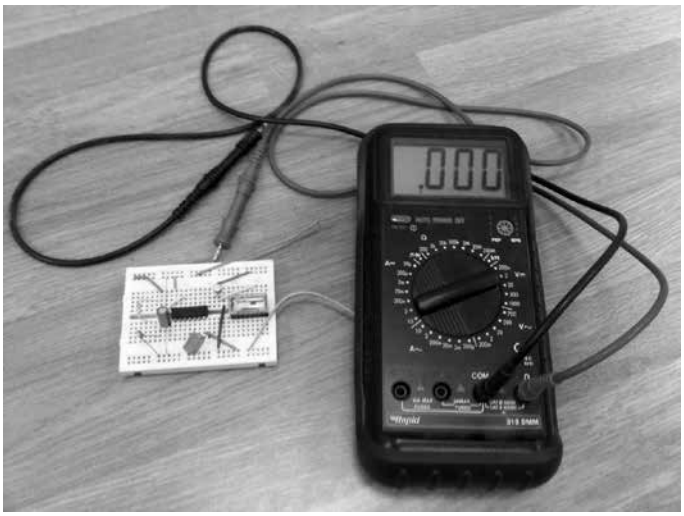

Figure 13

(a) (i) Explain **one** reason why breadboards are used to make a prototype circuit.

(2)

.....

.....

.....

.....

(ii) Explain **one** reason why a multimeter was used to test elements of the prototype circuit.

(2)

.....

.....

.....

.....

(b) Figure 14 shows a plastic case for the circuit board.

The plastic case is a one-piece, fold-together case, made using the vacuum-forming process.

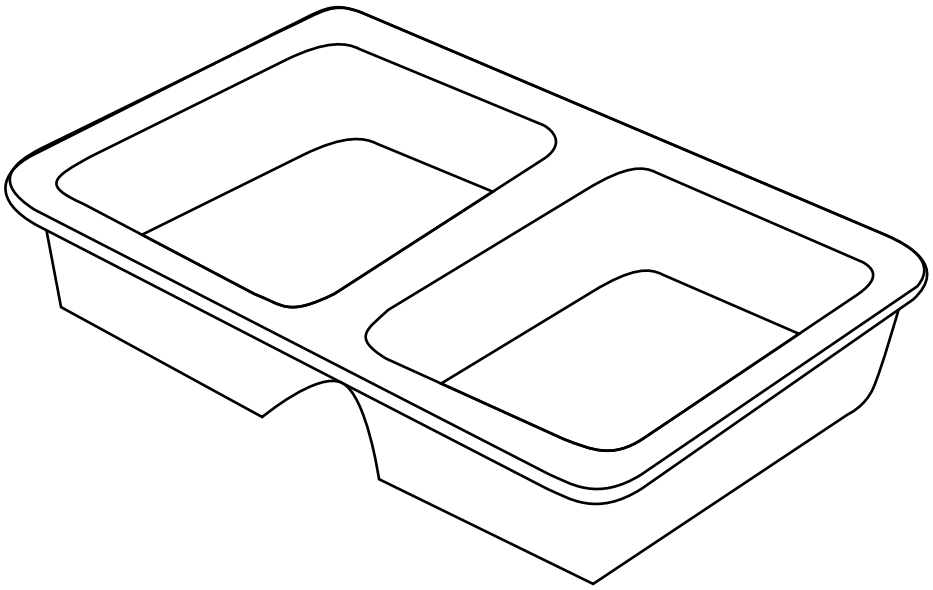

Figure 14

Use notes and/or sketches to show the process of vacuum forming the case.

You will be marked on how you apply your understanding of design and technology, not your graphical skills.

(4)

(c) Explain **one** reason why the plastic case is shaped as a one-piece, fold-together container.

(2)

.....

.....

.....

.....

(d) The circuit is going to be mass produced.

Name **two** methods that can be used to mass produce the circuit.

For each method, explain one advantage to the manufacturer of using this method.

(6)

Method 1

.....

Explanation

.....

.....

.....

.....

.....

Method 2

.....

Explanation

.....

.....

.....

.....

.....

(Total for Question 6 = 16 marks)

7 Figure 15 shows Bluetooth® speakers.

The speakers can be connected to mobile devices, such as phones, in order to play music.

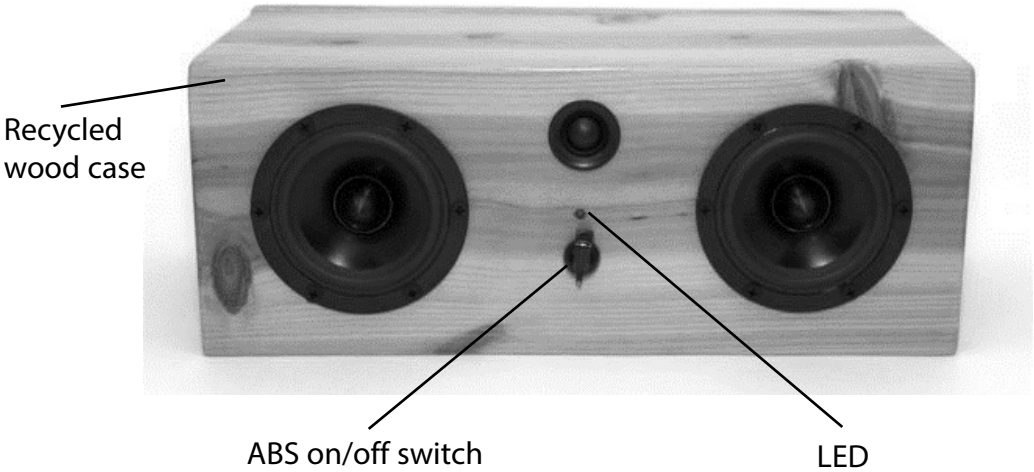

Figure 15

(a) The case for the speakers has a hole for a light-emitting diode (LED).

The LED is wired to the main circuit board inside the case.

Give **one** method providing adequate strain relief to the wired connections.

(1)

.....

(b) A large number of resistors are used in the main circuit board.

Explain **two** reasons why resistors with different tolerances are used in the main circuit board.

(4)

1 .....

.....

.....

.....

.....

.....

2 .....

.....

.....

.....

.....

.....

(c) The LED uses a current limiting resistor.

Ohm's law: $V = I \times R$

Supply voltage = 12 V

The LED requires 2 V at 20 mA and a resistor is chosen to meet this requirement.

Calculate the range of values that this resistor may have if it has a gold band, indicating a tolerance of 5%.

(5)

Answer ..... Ω. to ..... Ω

(d) Explain **two** reasons why acrylonitrile butadiene styrene (ABS) is an appropriate material/component for the on/off switch.

(6)

1 .....

.....

.....

.....

.....

.....

2 .....

.....

.....

.....

.....

.....

(Total for Question 7 = 16 marks)

8 Figure 16 shows a mobile phone with the back removed to show its circuitry.

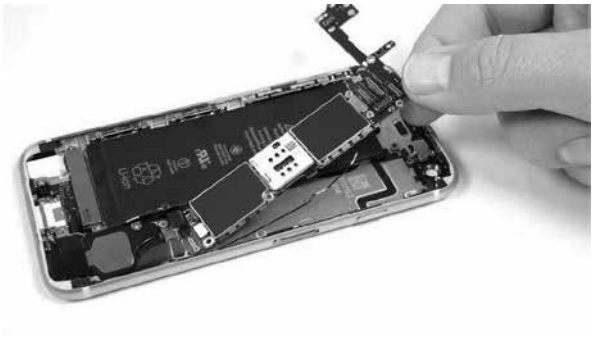

(Source: www.cnet.com/news/iphone-6s-teardown-reveals-upgrades-galore-similar-hardware-layout/)

Figure 16

(a) (i) Explain **one** reason why tin or nickel-plated copper contacts were used.

(2)

.....

.....

.....

.....

(ii) The mobile phone case is made from aluminium.

Explain **one** working property of aluminium that makes it suitable for the mobile-phone case.

(3)

.....

.....

.....

.....

.....

.....

(b) Explain **two** benefits to the manufacturer of using a system of automated quality-control checks.

(4)

1 .....

.....

.....

.....

2 .....

.....

.....

.....

(c) Earphones can be used to connect to the mobile phone.

Figure 17 shows some information about the earphones.

(Source: © Isamare/Shutterstock)

Features	Moulded and sealed case and wires
Materials used	Rubber ABS Aluminium Nickel Copper Neodymium magnets
Use of recycled materials	10% recycled plastics
Recyclability	Requires specialist recycling facility
Weight	16 grams

Figure 17

Analyse the information in Figure 17.

Evaluate the earphones in terms of their ecological footprint.

(9)

(Total for Question 7 = 18 marks)

TOTAL FOR SECTION B = 60 MARKS
TOTAL FOR PAPER = 100 MARKS

BLANK PAGE

Component 1 mark scheme – 1DT0/1D

Section A – Core content

Question number	Answer	Mark
1(a)(i)	Any **one** property from: • lightweight (1) • soft (1) • low density (1).	**(1)**

Question number	Answer	Mark
1(a)(ii)	Any **one** property from: • ductile (1) • malleable (1) • non-corrosive/will not rust (1) • non-reactive with paint (1).	**(1)**

Question number	Answer	Mark
1(a)(iii)	Any **one** property from: • waterproof (1) • plasticity (1) • electrical insulator (1).	**(1)**

Question number	Answer	Mark
1(a)(iv)	Any **one** property from: • lightweight (1) • soft (1) • good water resistance/hydrophobic (1) • good insulator of heat (1)	**(1)**

Question number	Answer	Additional guidance	Mark
1(b)	Any **one** explanation that includes a method of use (1) and a linked justification of that use (1). • The temperature-responsive polymers could give an indication of when it is safe to drink (1) as they will change colour when hot/cool (1). • The temperature-responsive polymers can be used as an aesthetic feature (1), as any logos/images will change colour when hot/cool (1).	Do not award a single mark for simply saying 'they could be used'.	**(2)**

Question number	Answer	Mark
1(c)	**Marks will be awarded for understanding of design and technology, not graphical skills.** Notes and/or sketches that include: • flat linerboard/outer/inner surface (1) • fluted corrugated sheet (1). Example of candidate response: 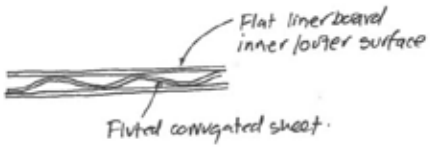	**(2)**

Question number	Answer	Mark
2(a)	Any **one** explanation that includes a benefit (1) and a linked justification of that benefit (1). • MDF is made from waste material (1), therefore the waste will not need to go to landfill/be dumped (1). • Using MDF will reduce the amount of natural timber being consumed/cut down (1), therefore pine as a natural resource will last longer/be put to better use (1).	**(2)**

Question number	Answer	Additional guidance	Mark
2(b)	A calculation that includes: • conversion of units (1) • correct number of whole pieces by dimension (1) • correct sum (1). 300 mm = 30 cm (1) $\frac{61}{30}$ = 2 whole cuts $\frac{122}{30}$ = 4 whole cuts (1) 2 × 4 = 8 whole cuts (1)	Award full marks for correct numerical answer without working. Allow ecf if candidate gets part of calculation wrong.	**(3)**

Question number	Answer	Mark
2(c)	Any **one** explanation that includes an advantage (1) and a linked justification of that advantage (1). • Blended fibres combine the properties of the original fibres (1), therefore the properties can be improved/enhanced (1). • Combing/blending fibres allows cheaper fibres to be incorporated (1), therefore the overall cost of the fabric will be reduced (1). • The appearance/performance of the fabric can be improved/enhanced (1), therefore it is more attractive/appealing to the end user (1). Do not accept cheap on its own, unless qualified.	**(2)**

Question number	Answer	Mark
2(d)	Any **one** explanation that includes a benefit (1) and a linked justification of that benefit (1). • They will/may not be able to make the clock mechanism themselves (1), therefore they do not need to invest in specialist machinery/training/workforce (1). • They will be made by a specialist (1), therefore they will come with a guarantee/ensure quality (1).	**(2)**

Question number	Answer	Mark
3(a)(i)	Type 3	**(1)**

Question number	Answer	Mark
3(a)(ii)	Type 2	**(1)**

Question number	Answer	Additional guidance	Mark
3(b)	A calculation that includes: • transposition of formula and calculation to show MA ÷ VR = 0.85 (1) • transposition of formula to show MA = 3.4 (1) • transposition of MA formula and calculation of load = 340 N (1). Efficiency = $\frac{MA}{VR} \times 100\%$ $\frac{MA}{VR} = 0.85$ (1) VR × 0.85 = MA VR = 4 MA = 4 × 0.85 = 3.4 (1) Effort = 100 MA = $\frac{load}{effort}$ 3.4 = $\frac{load}{100}$ load = 100 × 3.4 = 340 N (1)	Award full marks for correct numerical answer without working. Allow ecf if candidate gets part of calculation wrong.	**(3)**

Question number	Answer	Mark
3(c)	Any **one** explanation that includes a benefit (1) and a linked justification of that benefit (1). • This will increase the mechanical advantage (1), therefore making it easier to lift the wheelbarrow (1). • A greater load/weight can be lifted (1) because there is greater leverage (1).	**(2)**

Question number	Answer	Mark
3(d)	Any **two** explanations that include a benefit (1) and a linked justification of that benefit (1). • They will have much less material in stock (1), therefore they have less money tied up/invested in materials they are not using (1). • They do not have to employ staff on permanent contracts (1), therefore they can employ staff as and when required, reducing the wage bill (1). • Once the wheelbarrows have been manufactured they are shipped out (1), therefore no expensive storage/warehouse required.	**(4)**

Question number	Answer	Mark
4(a)	Any **one** application from: • steering mechanism (1) • slush/lock gate (1) • pillar drilling machine (1) • lathe bed/saddle slide (1).	**(1)**

Question number	Answer	Additional guidance	Mark
4(b)	A calculation that includes: • calculation of circumference (1) • conversion of units: 3 m to 3000 mm (1) • correct sum = 7.96 (1) • 8 whole turns (1). $C = \pi d$ = 3.142 × 120 = 377.04 mm (1) 3 m = 3000 mm (1) $\frac{3000}{377.04} = 7.96$ (1) = 8 whole turns (1)	Award full marks for correct numerical answer without working. Allow ecf if candidate gets part of calculation wrong.	**(4)**

Question number	Answer	Mark
4(c)	12/12 thousand/12 000	**(1)**

Question number	Indicative content	Mark
4(d)	**AO3 (6 marks)** • Solar power is expensive to set up. • Solar power is free once installed. • Limited by sunlight hours. • Batteries lose ability to charge/recharge over time. • Mains power incurs a flat fee every year even if you do not use it. • Every time you open/close the gates it will cost you money if using mains power. • Power lines can be blown down in the wind, which means you cannot operate the gate in a power cut, therefore you may be shut in/out of your house. • Installing power lines is very expensive in remote areas, which means it might be prohibitively expensive to install them, therefore making solar power a more viable option. • If the solar exposure is low the batteries might not charge up enough, which means there might not be sufficient power to open/close the gates. • The standing charge is a flat fee that has to be paid, which means if you are away for a long period of time and do not use the gates, you still have to pay the charge, which will be a waste of money.	**(6)**

Level	Mark	Descriptor
	0	No rewardable material.
Level 1	1–2	• Attempts to interrogate and deconstruct information but connections and logical chains of reasoning are flawed. • An unbalanced appraisal of the information/issues, containing judgements that show a limited awareness of the interrelationships between factors or competing arguments.
Level 2	3–4	• Interrogates and deconstructs information and provides some connections and logical chains of reasoning. • A balanced appraisal of the information/issues, containing judgements that show an awareness of the interrelationships between factors or competing arguments.
Level 3	5–6	• Interrogates and deconstructs information and provides sustained connections and logical chains of reasoning. • A well-balanced appraisal of the information/issues, containing judgements that show a thorough awareness of the interrelationships between factors or competing arguments.

Section B – Systems

Question number	Answer	Additional guidance	Mark
5(a)	**Marks will be awarded for understanding of design and technology, not graphical skills.** Notes and/or sketches that include: • an on/off switch (1) that latches (1), e.g. correct symbol for a latching switch (1) in correct position/attached +V (1) • connected to the correct supply voltage (1) and 0 V (1), e.g. correct supply voltage (between 1.8 V and 5.5 V) (1) correct 0 V (1) • have an LED output to indicate when light levels change (1) connected to the microcontroller (PIC) correctly (1), e.g. correct symbol for LED (1) in correct position (1). Example of candidate response: 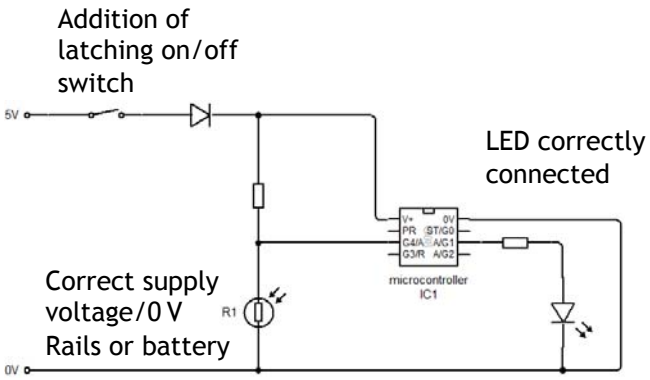 	Accept all appropriate properties and justifications. Current limiting resistor not necessary.	**(6)**

Question number	Answer	Additional guidance	Mark
5(b)	Any **two** explanations that include a way (1) and a linked justification of that way (1). • LEDs have been used as the light source (1). This is good because LEDs do not emit a lot of heat so the toy will not get hot enough to become uncomfortable/cause burns to children while using the product in bed (1). • The use of an inductive charger which is sealed means that there are no exposed plugs or sockets (1). This is good because children cannot put their fingers into the device when playing and touch live circuits which could be dangerous/damage the toy (1).	Accept all appropriate justifications.	**(4)**

Question number	Answer	Mark
6(a)(i)	Any **one** explanation that includes a reason (1) and a linked justification of that reason (1). • To test that the circuit works/find faults (1), therefore problems can be fixed before production starts (1). • Connections are not permanent like soldered joints/components (1), therefore they can be easily moved/changed/reused/not wasted (1).	**(2)**

Question number	Answer	Additional guidance	Mark
6(a)(ii)	Any **one** explanation that includes a reason (1) and a linked justification of that reason (1). • Used to measure or test resistance/current/voltage/named components (1) to ensure that the circuit is functioning as it should/identify faults (1). • Used to test continuity (1) because breaks in tracks may not be visible to the naked eye (1).	Do not accept 'to test circuit' or similar (in stem).	**(2)**

Question number	Answer	Additional guidance	Mark
6(b)	**Marks will be awarded for understanding of design and technology, not graphical skills.** Notes and/or sketches that include: • a mould is placed on the platen, which is lowered (1) • a plastic sheet is clamped into place above the mould (1) • the heater is pulled over the plastic sheet/when the plastic sheet has softened the platen is raised (1) • a pump expels the air, which creates a vacuum causing the plastic to be forced over mould (1) • the platen is lowered and the mould removed (1). Example of candidate response: 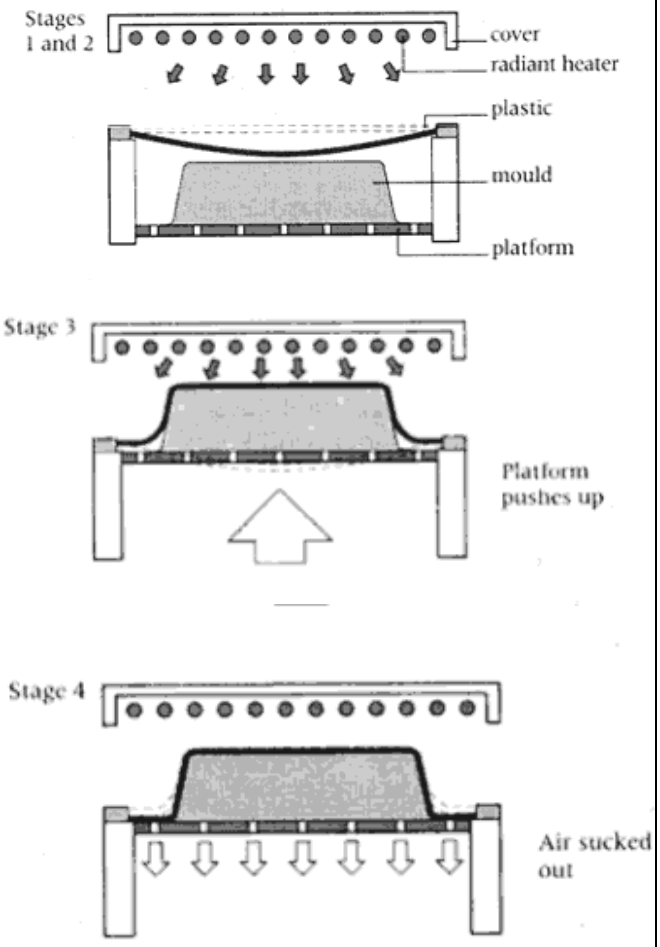 Annotated notes: Stages 1 and 2 – cover, radiant heater, mould, platform. Stage 3 – Platform pushes up. Stage 4 – Air sucked out.	Max 3 marks if no reference to either heating or vacuum (max 2 marks if miss out both).	**(4)**

Question number	Answer	Mark
6(c)	Any **one** explanation that includes a reason (1) and a linked justification of that reason (1). • The one-piece construction reduces the number of components required (1), therefore reducing assembly time (1). • The case can be sealed easily along the edge (1), therefore preventing damage from moisture (1).	**(2)**

Question number	Answer	Additional guidance	Mark
6(d)	Any **two** explanations that include a reason (1), plus **two** linked justifications of that reason (1) + (1). • SMT (Surface Mount Technology) (1) allows components to be placed on the surface rather than inserting legs/pins through holes (1), which speeds up production time/saves holes having to be drilled (1). • Float soldering can be used rather than conventional soldering (1), it does not require any human intervention (1) which cuts down on errors (1).	Accept all appropriate justifications. Do not accept **repeated** points or justifications.	**(6)**

Question number	Answer	Mark
7(a)	Any **one** method from: • loop the wires through a (strain relief) hole (1) • use plugs/headers/sockets/sleeves (1).	**(1)**

Question number	Answer	Mark
7(b)	Any **two** explanations that include a reason (1) and a linked justification of that reason (1). • Certain parts of the speaker circuit require more precise resistances (1), therefore these would need lower tolerance resistors/more accurate resistors (1). • Resistors with higher tolerances are cheaper (1), therefore when the resistance doesn't need to be accurate they can be used and reduce the price of the speakers (1). • Resistor tolerances change with changes in temperature (1) so resistors that may heat up more, in a circuit, than others may require a smaller tolerance (1).	**(4)**

Question number	Answer	Additional guidance	Mark
7(c)	A calculation that includes: • correctly transposing formula (1) $R = \frac{V}{I}$ • correctly calculating voltage (1) $R = \frac{10}{20\ \text{mA}}$ or V = 12 − 2 • correct conversion mA to A (1) $R = \frac{10}{0.02\ \text{A}}$ • correct calculation (1) R = 500 Ω or 0.5 kΩ • correct percentage calculation 5% of 500 = 25 Ω • correct range (1) 475 Ω to 525 Ω	Award full marks for correct numerical answer without working. Allow ecf if candidate gets part of calculation wrong.	**(5)**

Question number	Answer	Additional guidance	Mark
7(d)	Any **two** explanations that include a reason (1), plus **two** linked reasons of that way (1) + (1). • ABS is tough (1) so will not crack or break under strain (1), which is necessary as the switch will be in constant use (1). • ABS is impact resistant (1) so it will not be damaged if knocked/dropped (1), which is important for a portable product, which is more likely to suffer shocks (1). • ABS is recyclable (1) so it can be reused in other products (1) which fits in with the environmentally friendly image of the product (1)	Accept all appropriate justification.	**(6)**

Question number	Answer	Mark
8(a)(i)	Any **one** explanation that includes an advantage (1) and a linked justification of that advantage (1). • Tin prevents oxidation/corrosion (1) so there will be better joints/solder will make a better connection (1). • Tin and zinc are malleable (1) so they will bend in the same way as copper without cracking (1).	**(2)**

Question number	Answer	Mark
8(a)(ii)	Any **one** explanation that includes a working property (1), plus **two** linked justifications of that working property (1) + (1). • More rigid than most polymers (1), which means that it protects the components/glass screen from damage (1) therefore allowing the user to keep in pocket/survives normal usage (1). • More lightweight than other metals (1), which means it is a lighter product (1), therefore it will be more portable (1).	**(3)**

Question number	Answer	Additional guidance	Mark
8(b)	Any **two** explanations that include a benefit (1) and a linked justification of that benefit (1). • Quicker than manual checks (1), therefore it does not slow down production (1). • It allows for 100% inspection (1), therefore all defects are detected (1). • Reduced human involvement (1), therefore reducing labour costs/wage bill (1).	Accept all appropriate justifications. Do **not** accept repeated points or justifications.	**(4)**

Question number	Indicative content	Mark
8(c)	**AO3 (9 marks)** Analysis of the earphones with respect to: • product is smaller – less material compared to other sound output devices • plastic components rely on non-renewable crude oil • use of smaller case/miniaturised electronics/SMT more sustainable • fused components/case is harder to disassemble for recycling and harder to reuse/maintain/repair • does not require separate power source, leading to lower power consumption • failure of customers to recycle electronic waste reliably increases chance of ending up in landfill • extraction of the metal ores/crude oil results in erosion of landscape • processing aluminium ore results in high greenhouse gas emissions • any waste aluminium from production can be recycled and reused • transportation of the aluminium/uses more fossil fuels for diesel and causes more $C0_2$ emissions • company may try to offset its carbon footprint to compensate for emissions made elsewhere in the manufacturing process.	**(9)**

Level	Mark	Descriptor
	0	No rewardable material.
Level 1	1–3	• Attempts to interrogate and deconstruct information but connections and logical chains of reasoning are flawed. • An unbalanced appraisal of the information/issues, containing judgements that show a limited awareness of the interrelationships between factors or competing arguments. • A conclusion may be presented but it is likely to be generic assertions rather than supported by relevant judgements.
Level 2	4–6	• Interrogates and deconstructs information and provides some connections and logical chains of reasoning. • A balanced appraisal of the information/issues, containing judgements that show an awareness of the interrelationships between factors or competing arguments. • A conclusion is presented that is partially supported by relevant judgements.
Level 3	7–9	• Interrogates and deconstructs information and provides sustained connections and logical chains of reasoning. • A well-balanced appraisal of the information/issues, containing judgements that show a thorough awareness of the interrelationships between factors or competing arguments. • A conclusion is presented that is fully supported by relevant judgements.

Write your name here

Surname	Other names

Pearson Edexcel
Level 1/Level 2 GCSE (9–1)

Centre Number | Candidate Number

Design and Technology

Component 1

Sample assessment material for first teaching
September 2017
Time: 1 hour 45 minutes

Paper Reference
1DT0/1E

You must have:
a calculator
a ruler

Total Marks

Instructions

- Use **black** ink or ball-point pen.
- **Fill in the boxes** at the top of this page with your name, centre number and candidate number.
- Answer **all** questions.
- Answer the questions in the spaces provided – *there may be more space than you need.*
- Any diagrams may NOT be accurately drawn, unless otherwise indicated.
- You must **show all your working out** with **your answer clearly identified** at the **end of your solution**.

Information

- The total mark for this paper is 100.
- The marks for **each** question are shown in brackets – *use this as a guide as to how much time to spend on each question.*

Advice

- Read each question carefully before you start to answer it.
- Try to answer every question.
- Check your answers if you have time at the end.

Turn over

S55253A

1/1

S 5 5 2 5 3 A 0 1 2 8

Pearson

SECTION A – CORE

Answer ALL questions. Write your answers in the spaces provided.

1 The materials that products are made from are chosen because of their characteristics.

(a) Figure 1 shows a table of products.

For each of the products shown, give a property of the material it is made from that makes the material suitable for the product.

The first one has been done for you.

Picture of product	Description of product	Property
 (Source: © Feng Yu/Shutterstock)	A polystyrene coffee cup	Good insulator of heat
 (Source: © 3DMAVR/Shutterstock)	A balsawood toy boat	(1) (i) .....
 (Source: © Anteromite/Shutterstock)	An aluminium paint tube	(1) (ii) .....
 (Source: © Morphart Creation/Shutterstock)	An acrylic bath	(1) (iii) .....

Picture of product	Description of product	Property
 (Source: © Borislav Bajkic/Shutterstock)	A fleece hat	(1) (iv) .....

Figure 1

(b) Figure 2 shows a coffee cup.

The manufacturers of the cup want to improve it by using temperature-responsive polymers.

(Source: © Feng Yu/Shutterstock)

Figure 2

Explain how temperature-responsive polymers could be used to improve the coffee cup.

(2)

.....

.....

.....

.....

(c) Figure 3 shows a cardboard sleeve around a coffee cup.

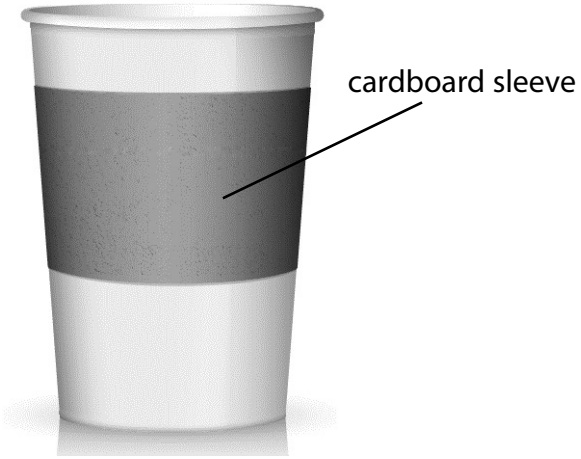

(Source: © Walking-onstreet/Shutterstock)

Figure 3

The sleeve is manufactured from corrugated cardboard.

Use notes and/or sketches to show the construction of corrugated cardboard.

You will be marked on how you apply your understanding of design and technology, not your graphical skills.

(2)

(Total for Question 1 = 8 marks)

2 Figure 4 shows an MDF square.

The MDF square will be covered with fabric to make a wall clock.

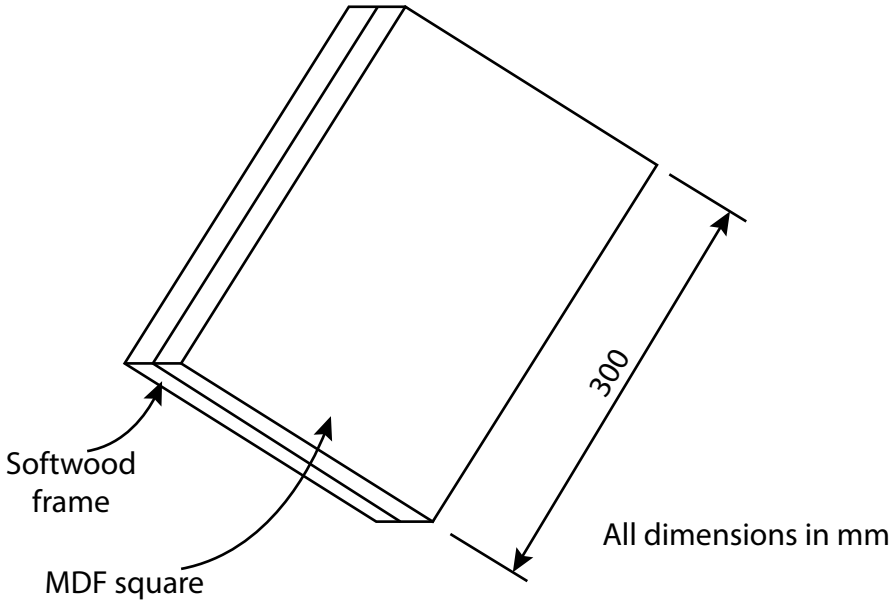

Figure 4

(a) Explain **one** benefit for the environment of using MDF rather than pine to make the wall clock.

(2)

.....

.....

.....

.....

(b) MDF is available in 61 cm × 122 cm sheets.

Calculate how many 300 mm × 300 mm squares can be cut from the available sheet.

(3)

.....

(c) The clock face is covered with a blended fibre fabric.

Explain **one** advantage of blending fibres to make fabrics.

(2)

.....

.....

.....

.....

(d) Figure 5 shows a clock mechanism.

(Source: www.clockparts.co.uk)

Figure 5

Explain **one** benefit to the clock manufacturer of buying the clock mechanisms as standard components.

(2)

.....

.....

.....

.....

(Total for Question 2 = 9 marks)

3 Levers are classified as class 1, 2 or 3.

(a) Figure 6 shows two different products, both are types of lever.

F is the fulcrum, E is the effort and L is the load.

For each of the products shown, name the type of lever.

Product	Type of lever
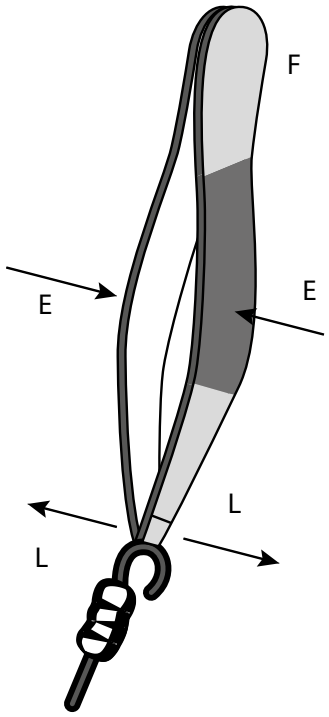 Tweezers	**(1)** (i) .....
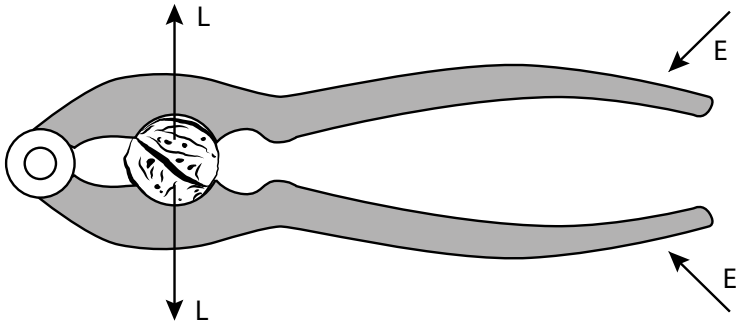 Nutcracker	**(1)** (ii) .....

Figure 6

(b) Figure 7 shows a loaded wheelbarrow.

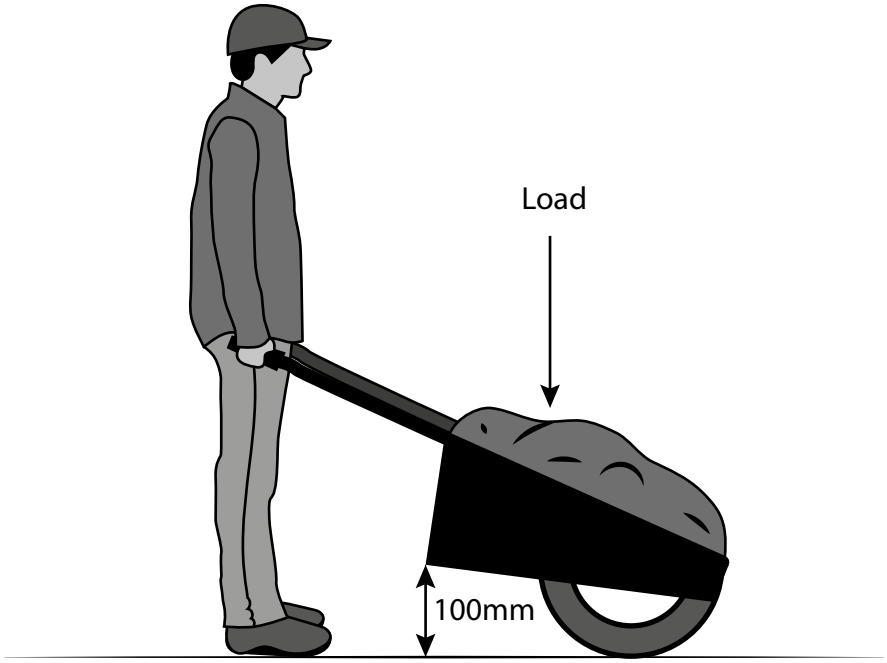

Figure 7

Mechanical advantage (MA) is calculated by:

$$MA = \frac{\text{load}}{\text{effort}}$$

The velocity ratio (VR) is 4 and the effort is 100 N.

The efficiency of the system is given by:

$$\text{Efficiency} = \frac{MA}{VR} \times 100\%$$

The system is 85% efficient.

Calculate the maximum load that can be lifted.

(3)

..... N

(c) Explain **one** reason why the length of the handles on the wheelbarrow would be increased.

(2)

.....

.....

.....

.....

(d) Explain **two** benefits that just-in-time (JIT) manufacturing could have for the manufacturer of the wheelbarrow.

(4)

1 .....

.....

.....

2 .....

.....

.....

(Total for Question 3 = 11 marks)

4 Figure 8 shows a gate.

The gate is moved by an electric motor in combination with a rack and pinion mechanism.

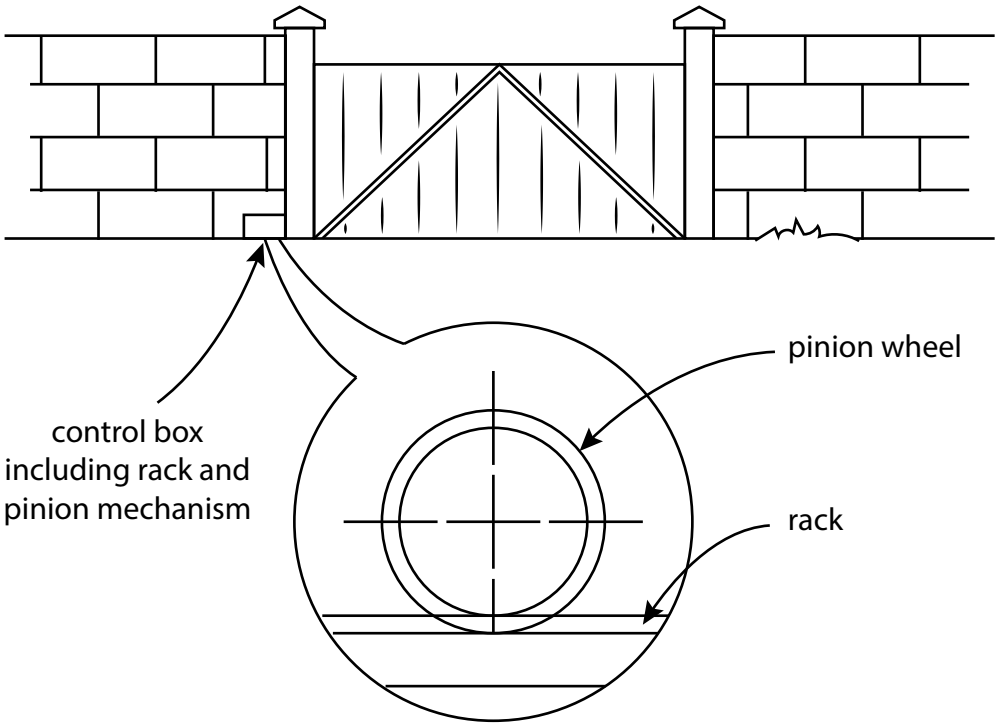

Figure 8

(a) Give **one** other application of a rack and pinion mechanism.

(1)

.....

(b) The gate needs to move 3 m to open fully.

The pinion wheel has a radius of 60 mm.

Calculate the number of revolutions the pinion wheel must rotate in order to open the gate fully.

Give your answer to the nearest whole number.

(4)

Use $\pi = 3.142$

Formula for circumference = πd

.....

(c) Figure 9 shows a graph of the approximate number of people employed in solar-power-related industries between 2012 and 2016.

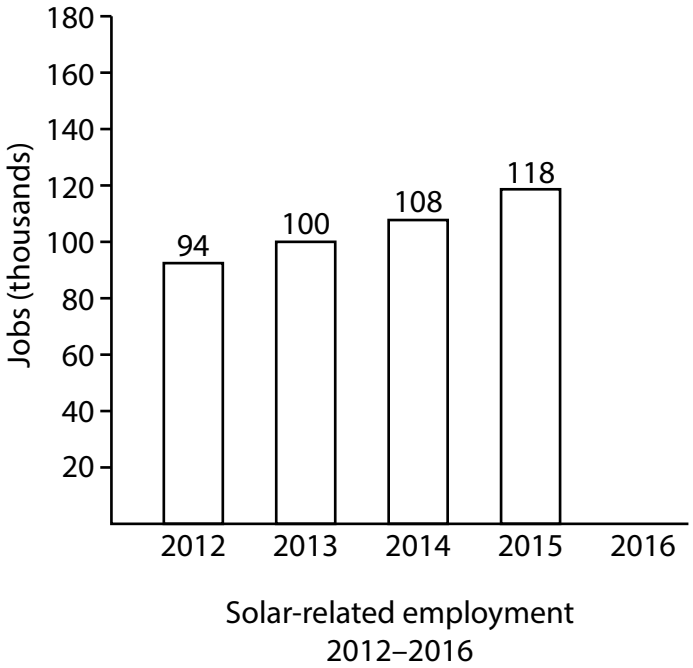

Figure 9

Analyse the graph.

Calculate the expected increase in the number of people employed in solar-power related industries in 2016, based on the current trend.

(1)

increase = ...

(d) The manufacturer considered two different power supplies to power the electric gates.

Figure 10 shows data for these power supplies.

Factor	Solar	Mains electricity
Storage method	Battery	None required on National Grid
Upfront costs	£6000	Nil
Cost per kwh	Nil	9.596 pence
Annual standing charge	Nil	£116

Figure 10

Analyse the data provided.

Discuss the issues that the manufacturer would need to consider when making the decision about which power supply to choose.

(6)

.....

.....

.....

.....

.....

.....

.....

.....

.....

.....

.....

.....

(Total for Question 4 = 12 marks)

TOTAL FOR SECTION A = 40 MARKS

SECTION B – TEXTILES

Answer ALL questions. Write your answers in the spaces provided.

5 Figure 11 shows a design solution and some additional information for a cyclist's vest.

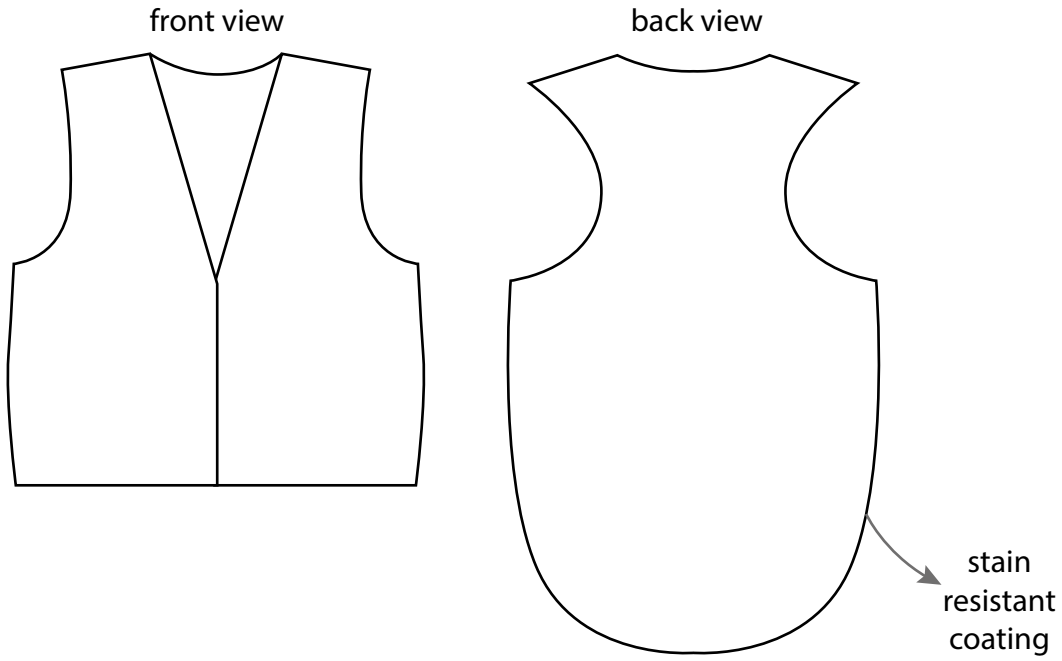

Additional information

Dimensions for puncture kit

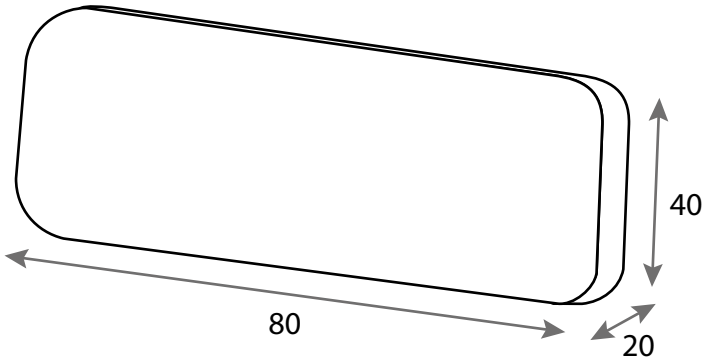

All dimensions are in millimetres.

Figure 11

(a) The cyclist's vest needs to be improved to include the following specification points.

The cyclist's vest must:

- be highly visible at night and in the day
- show the brand's logo 'TimeTravellers', using a batch-produced method
- be easy to put on and take off.

Use notes and/or sketches to show how the cyclist's vest could be modified to include these three specification points.

You will be marked on how you apply your understanding of design and technology, not your graphical skills.

Use the outline of the original design solution to show your modifications.

(6)

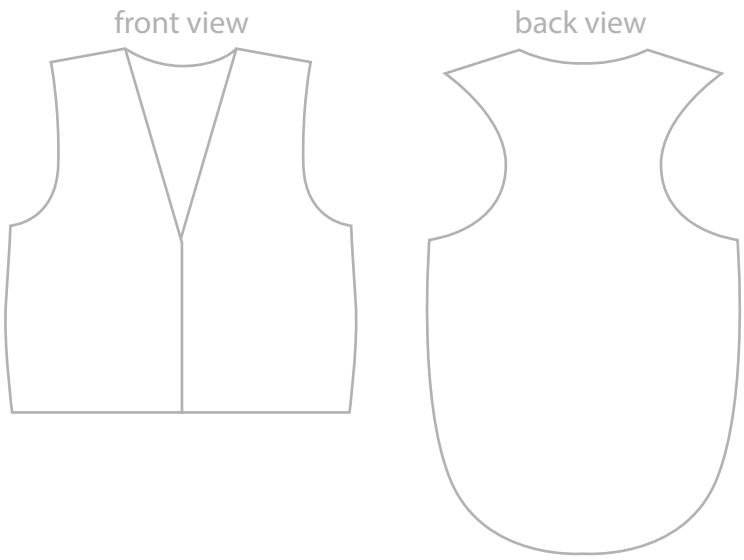

(b) Figure 12 shows a pair of cycling shorts.

The shorts must be comfortable to wear while cycling.

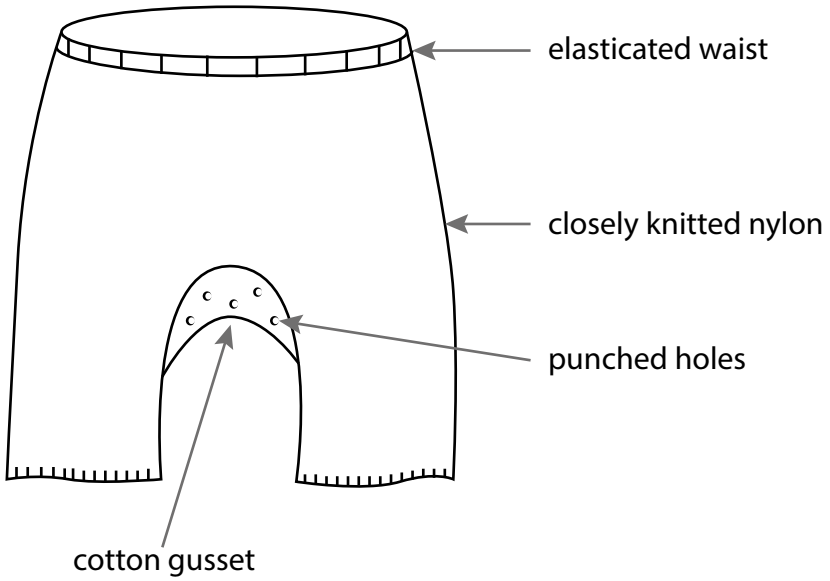

Figure 12

Analyse the cycling shorts.

Explain **two** ways in which the cycling shorts meet or fail to meet the criterion of being comfortable to wear while cycling.

(4)

1 .....

.....

.....

.....

2 .....

.....

.....

.....

(Total for Question 5 = 10 marks)

6 Figure 13 shows a school bag.

The bag is being made as a one-off prototype.

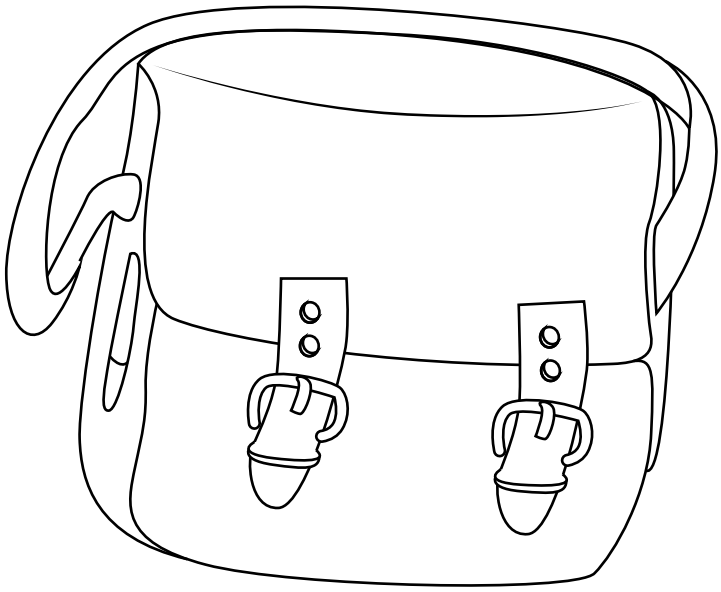

front view

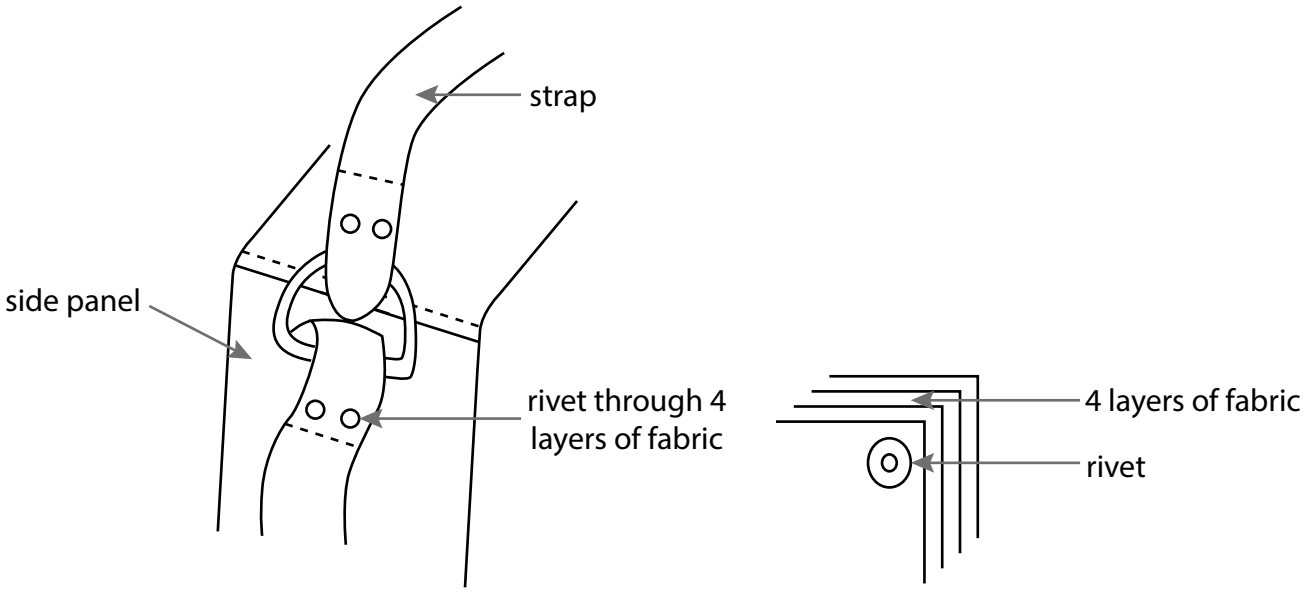

Figure 13

(a) (i) Figure 14 shows a D ring.

Explain **one** reason why a D ring was used in the manufacture of the school bag.

(2)

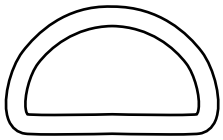

Figure 14

.....

.....

.....

.....

(ii) Explain **one** reason why the rivets were used in the manufacture of the school bag.

(2)

.....

.....

.....

.....

(b) Figure 15 shows piping.

The piping has been added to the strap of the school bag.

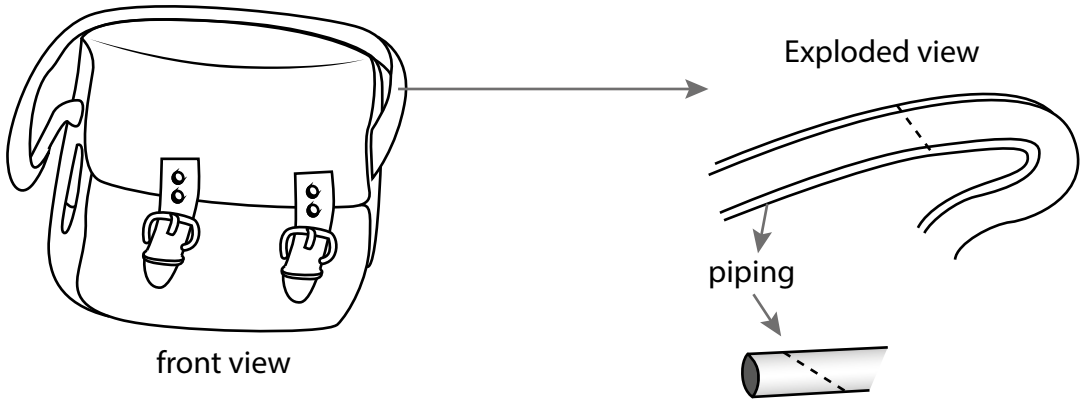

Figure 15

Use notes and/or sketches to show the process of constructing and inserting the piping onto the strap of the school bag.

You will be marked on how you apply your understanding of design and technology, not your graphical skills.

(4)

(c) Explain **one** reason why the piping was added to the strap of the school bag.

(2)

.....

.....

.....

.....

(d) The school bag is going to be mass produced with the school logo printed on each bag.

Name **two** methods that can be used to mass produce the logo for the school bag.

For each method, explain one advantage to the manufacturer of using this method.

(6)

Method 1

.....

Explanation

.....

.....

.....

.....

.....

Method 2

.....

Explanation

.....

.....

.....

.....

.....

(Total for Question 6 = 16 marks)

7 Figure 16 shows a soft toy.

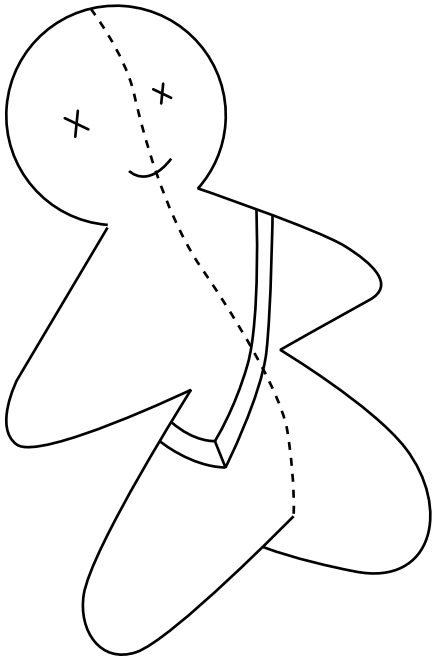

Figure 16

(a) The edges of the sash worn across the soft toy have been attached at an angle.

Give **one** method of increasing the strength of the sash.

(1)

.....

(b) The manufacturer is considering making the soft toy out of knitted nylon from a range of denier stock sizes.

Explain **two** reasons why denier stock sizes must be carefully considered in the production of the soft toy.

(4)

1 .....

.....

.....

.....

2 .....

.....

.....

.....

(c) Figure 17 shows the dimensions for the back panel of the soft toy.

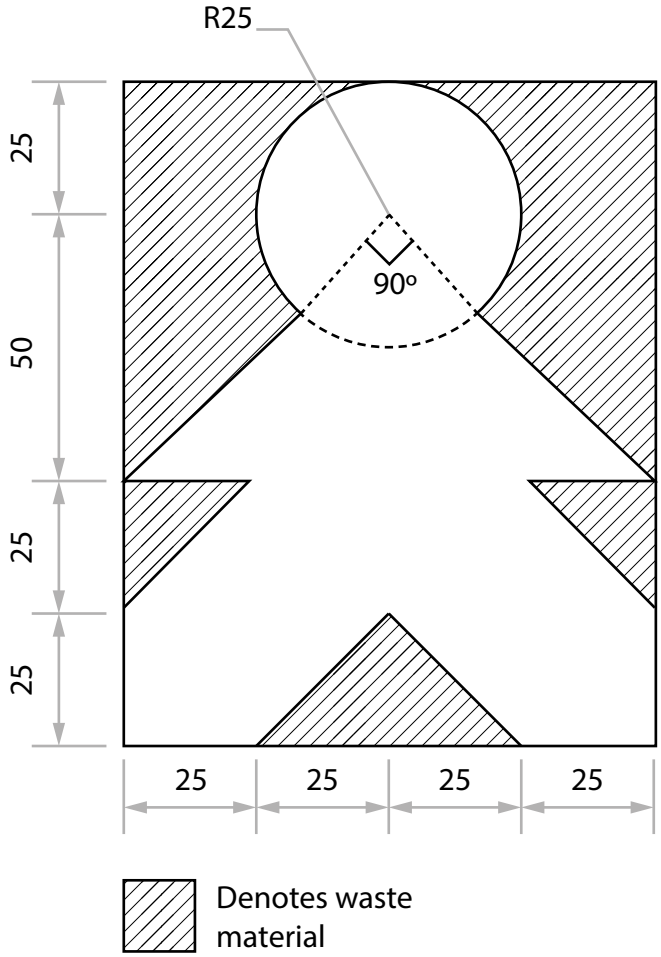

All dimensions are in mm.

Figure 17

Calculate how much fabric is wasted from the whole piece, in cm2.

Give your answer to 2 decimal places.

Area of a circle = $\pi \times r^2$

Area of a triangle = ½ × base × height

Use $\pi = 3.142$

(5)

..... cm²

(d) The soft toy's fabric has been micro-encapsulated with medicine.

Explain **two** other ways in which micro-encapsulation can be used in the soft toy's fabric.

(6)

1 .....

.....

.....

.....

.....

.....

2 .....

.....

.....

.....

.....

.....

(Total for Question 7 = 16 marks)

8 Figure 18 shows a dress.

(Source: © sergeevana/Shutterstock)

Figure 18

(a) (i) Explain **one** reason why a stain-resistant finish was applied to the dress.

(2)

.....

.....

.....

.....

(ii) The dress is made from nylon.

Explain **one** working property of nylon that makes it suitable for the dress.

(3)

.....

.....

.....

.....

.....

(b) The dress has an invisible zip inserted at the back.

Explain **two** quality-control checks that would be carried out on the invisible zip during the manufacturing process.

(4)

1 .....

.....

.....

.....

2 .....

.....

.....

.....

(c) A dress is to be sold in the UK as part of a formal-wear range.

Figure 19 shows the dress and some additional information about the dress.

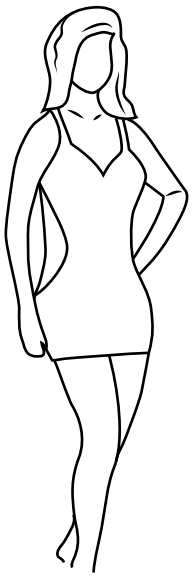

Dress	
Type of fibre – Mulberry silk	Source – China
Length – upper thigh	Spaghetti straps
Colour – neon green	Other features – cut-out sides

Figure 19

Analyse the information in Figure 19.

Evaluate the dress with reference to its ethical value.

(9)

.....

.....

.....

.....

.....

.....

.....

.....

(Total for Question 8 = 18 marks)

TOTAL FOR SECTION B = 60 MARKS
TOTAL FOR PAPER = 100 MARKS

Component 1 mark scheme – 1DT0/1D

Section A – Core content

Question number	Answer	Mark
1(a)(i)	Any **one** property from: • lightweight (1) • soft (1) • low density (1).	**(1)**

Question number	Answer	Mark
1(a)(ii)	Any **one** property from: • ductile (1) • malleable (1) • non-corrosive/will not rust (1) • non-reactive with paint (1).	**(1)**

Question number	Answer	Mark
1(a)(iii)	Any **one** property from: • waterproof (1) • plasticity (1) • electrical insulator (1).	**(1)**

Question number	Answer	Mark
1(a)(iv)	Any **one** property from: • lightweight (1) • soft (1) • good water resistance/hydrophobic (1) • good insulator of heat (1)	**(1)**

Question number	Answer	Additional guidance	Mark
1(b)	Any **one** explanation that includes a method of use (1) and a linked justification of that use (1). • The temperature-responsive polymers could give an indication of when it is safe to drink (1) as they will change colour when hot/cool (1). • The temperature-responsive polymers can be used as an aesthetic feature (1), as any logos/images will change colour when hot/cool (1).	Do not award a single mark for simply saying 'they could be used'.	**(2)**

Question number	Answer	Mark
1(c)	**Marks will be awarded for understanding of design and technology, not graphical skills.** Notes and/or sketches that include: • flat linerboard/outer/inner surface (1) • fluted corrugated sheet (1). Example of candidate response: 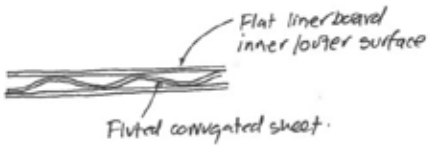	**(2)**

Question number	Answer	Mark
2(a)	Any **one** explanation that includes a benefit (1) and a linked justification of that benefit (1). • MDF is made from waste material (1), therefore the waste will not need to go to landfill/be dumped (1). • Using MDF will reduce the amount of natural timber being consumed/cut down (1), therefore pine as a natural resource will last longer/be put to better use (1).	**(2)**

Question number	Answer	Additional guidance	Mark
2(b)	A calculation that includes: • conversion of units (1) • correct number of whole pieces by dimension (1) • correct sum (1). 300 mm = 30 cm (1) $\frac{61}{30}$ = 2 whole cuts $\frac{122}{30}$ = 4 whole cuts (1) 2 × 4 = 8 whole cuts (1)	Award full marks for correct numerical answer without working. Allow ecf if candidate gets part of calculation wrong.	**(3)**

Question number	Answer	Mark
2(c)	Any **one** explanation that includes an advantage (1) and a linked justification of that advantage (1). • Blended fibres combine the properties of the original fibres (1), therefore the properties can be improved/enhanced (1). • Combing/blending fibres allows cheaper fibres to be incorporated (1), therefore the overall cost of the fabric will be reduced (1). • The appearance/performance of the fabric can be improved/enhanced (1), therefore it is more attractive/appealing to the end user (1). Do not accept cheap on its own, unless qualified.	**(2)**

Question number	Answer	Mark
2(d)	Any **one** explanation that includes a benefit (1) and a linked justification of that benefit (1). • They will/may not be able to make the clock mechanism themselves (1), therefore they do not need to invest in specialist machinery/training/workforce (1). • They will be made by a specialist (1), therefore they will come with a guarantee/ensure quality (1).	**(2)**

Question number	Answer	Mark
3(a)(i)	Type 3	**(1)**

Question number	Answer	Mark
3(a)(ii)	Type 2	**(1)**

Question number	Answer	Additional guidance	Mark
3(b)	A calculation that includes: • transposition of formula and calculation to show MA ÷ VR = 0.85 (1) • transposition of formula to show MA = 3.4 (1) • transposition of MA formula and calculation of load = 340 N (1). $\text{Efficiency} = \frac{MA}{VR} \times 100\%$ $\frac{MA}{VR} = 0.85$ (1) VR × 0.85 = MA VR = 4 MA = 4 × 0.85 = 3.4 (1) Effort = 100 $MA = \frac{\text{load}}{\text{effort}}$ $3.4 = \frac{\text{load}}{100}$ load = 100 × 3.4 = 340 N (1)	Award full marks for correct numerical answer without working. Allow ecf if candidate gets part of calculation wrong.	**(3)**

Question number	Answer	Mark
3(c)	Any **one** explanation that includes a benefit (1) and a linked justification of that benefit (1). • This will increase the mechanical advantage (1), therefore making it easier to lift the wheelbarrow (1). • A greater load/weight can be lifted (1) because there is greater leverage (1).	**(2)**

Question number	Answer	Mark
3(d)	Any **two** explanations that include a benefit (1) and a linked justification of that benefit (1). • They will have much less material in stock (1), therefore they have less money tied up/invested in materials they are not using (1). • They do not have to employ staff on permanent contracts (1), therefore they can employ staff as and when required, reducing the wage bill (1). • Once the wheelbarrows have been manufactured they are shipped out (1), therefore no expensive storage/warehouse required.	**(4)**

Question number	Answer	Mark
4(a)	Any **one** application from: • steering mechanism (1) • slush/lock gate (1) • pillar drilling machine (1) • lathe bed/saddle slide (1).	**(1)**

Question number	Answer	Additional guidance	Mark
4(b)	A calculation that includes: • calculation of circumference (1) • conversion of units: 3 m to 3000 mm (1) • correct sum = 7.96 (1) • 8 whole turns (1). $C = \pi d$ = 3.142 × 120 = 377.04 mm (1) 3 m = 3000 mm (1) $\frac{3000}{377.04} = 7.96$ (1) = 8 whole turns (1)	Award full marks for correct numerical answer without working. Allow ecf if candidate gets part of calculation wrong.	**(4)**

Question number	Answer	Mark
4(c)	12/12 thousand/12 000	**(1)**

Question number	Indicative content	Mark
4(d)	**AO3 (6 marks)** • Solar power is expensive to set up. • Solar power is free once installed. • Limited by sunlight hours. • Batteries lose ability to charge/recharge over time. • Mains power incurs a flat fee every year even if you do not use it. • Every time you open/close the gates it will cost you money if using mains power. • Power lines can be blown down in the wind, which means you cannot operate the gate in a power cut, therefore you may be shut in/out of your house. • Installing power lines is very expensive in remote areas, which means it might be prohibitively expensive to install them, therefore making solar power a more viable option. • If the solar exposure is low the batteries might not charge up enough, which means there might not be sufficient power to open/close the gates. • The standing charge is a flat fee that has to be paid, which means if you are away for a long period of time and do not use the gates, you still have to pay the charge, which will be a waste of money.	**(6)**

Level	Mark	Descriptor
	0	No rewardable material.
Level 1	1–2	• Attempts to interrogate and deconstruct information but connections and logical chains of reasoning are flawed. • An unbalanced appraisal of the information/issues, containing judgements that show a limited awareness of the interrelationships between factors or competing arguments.
Level 2	3–4	• Interrogates and deconstructs information and provides some connections and logical chains of reasoning. • A balanced appraisal of the information/issues, containing judgements that show an awareness of the interrelationships between factors or competing arguments.
Level 3	5–6	• Interrogates and deconstructs information and provides sustained connections and logical chains of reasoning. • A well-balanced appraisal of the information/issues, containing judgements that show a thorough awareness of the interrelationships between factors or competing arguments.

Section B – Systems

Question number	Answer	Additional guidance	Mark
5(a)	**Marks will be awarded for understanding of design and technology, not graphical skills.** Notes and/or sketches that include: • an on/off switch (1) that latches (1), e.g. correct symbol for a latching switch (1) in correct position/attached +V (1) • connected to the correct supply voltage (1) and 0 V (1), e.g. correct supply voltage (between 1.8 V and 5.5 V) (1) correct 0 V (1) • have an LED output to indicate when light levels change (1) connected to the microcontroller (PIC) correctly (1), e.g. correct symbol for LED (1) in correct position (1). Example of candidate response: 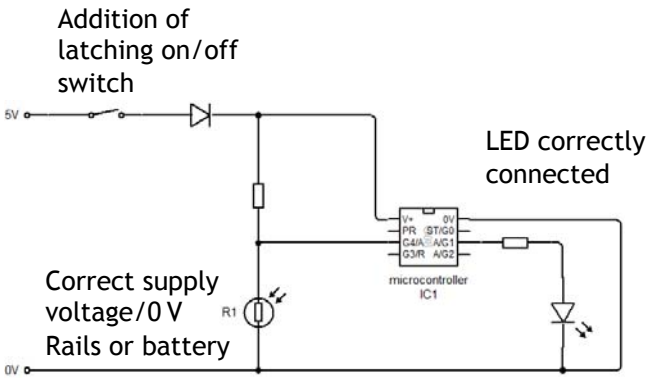 	Accept all appropriate properties and justifications. Current limiting resistor not necessary.	**(6)**

Question number	Answer	Additional guidance	Mark
5(b)	Any **two** explanations that include a way (1) and a linked justification of that way (1). • LEDs have been used as the light source (1). This is good because LEDs do not emit a lot of heat so the toy will not get hot enough to become uncomfortable/cause burns to children while using the product in bed (1). • The use of an inductive charger which is sealed means that there are no exposed plugs or sockets (1). This is good because children cannot put their fingers into the device when playing and touch live circuits which could be dangerous/damage the toy (1).	Accept all appropriate justifications.	**(4)**

Question number	Answer	Mark
6(a)(i)	Any **one** explanation that includes a reason (1) and a linked justification of that reason (1). • To test that the circuit works/find faults (1), therefore problems can be fixed before production starts (1). • Connections are not permanent like soldered joints/components (1), therefore they can be easily moved/changed/reused/not wasted (1).	**(2)**

Question number	Answer	Additional guidance	Mark
6(a)(ii)	Any **one** explanation that includes a reason (1) and a linked justification of that reason (1). • Used to measure or test resistance/current/voltage/named components (1) to ensure that the circuit is functioning as it should/identify faults (1). • Used to test continuity (1) because breaks in tracks may not be visible to the naked eye (1).	Do not accept 'to test circuit' or similar (in stem).	**(2)**

Question number	Answer	Additional guidance	Mark
6(b)	**Marks will be awarded for understanding of design and technology, not graphical skills.** Notes and/or sketches that include: • a mould is placed on the platen, which is lowered (1) • a plastic sheet is clamped into place above the mould (1) • the heater is pulled over the plastic sheet/when the plastic sheet has softened the platen is raised (1) • a pump expels the air, which creates a vacuum causing the plastic to be forced over mould (1) • the platen is lowered and the mould removed (1). Example of candidate response: 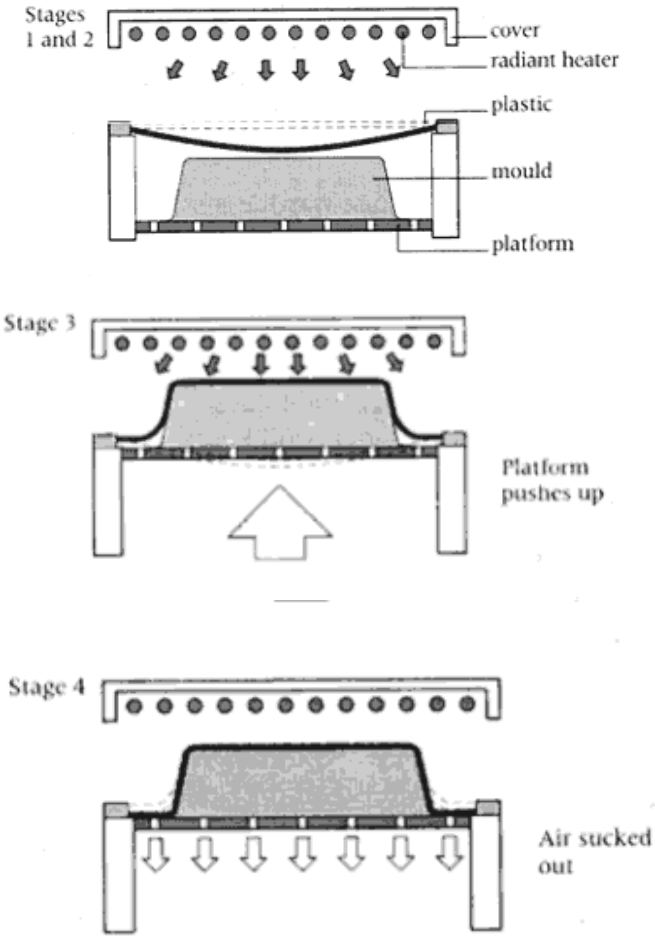 Annotated notes: Stages 1 and 2 – cover, radiant heater, mould, platform. Stage 3 – Platform pushes up. Stage 4 – Air sucked out.	Max 3 marks if no reference to either heating or vacuum (max 2 marks if miss out both).	**(4)**

Question number	Answer	Mark
6(c)	Any **one** explanation that includes a reason (1) and a linked justification of that reason (1). • The one-piece construction reduces the number of components required (1), therefore reducing assembly time (1). • The case can be sealed easily along the edge (1), therefore preventing damage from moisture (1).	**(2)**

Question number	Answer	Additional guidance	Mark
6(d)	Any **two** explanations that include a reason (1), plus **two** linked justifications of that reason (1) + (1). • SMT (Surface Mount Technology) (1) allows components to be placed on the surface rather than inserting legs/pins through holes (1), which speeds up production time/saves holes having to be drilled (1). • Float soldering can be used rather than conventional soldering (1), it does not require any human intervention (1) which cuts down on errors (1).	Accept all appropriate justifications. Do not accept **repeated** points or justifications.	**(6)**

Question number	Answer	Mark
7(a)	Any **one** method from: • loop the wires through a (strain relief) hole (1) • use plugs/headers/sockets/sleeves (1).	**(1)**

Question number	Answer	Mark
7(b)	Any **two** explanations that include a reason (1) and a linked justification of that reason (1). • Certain parts of the speaker circuit require more precise resistances (1), therefore these would need lower tolerance resistors/more accurate resistors (1). • Resistors with higher tolerances are cheaper (1), therefore when the resistance doesn't need to be accurate they can be used and reduce the price of the speakers (1). • Resistor tolerances change with changes in temperature (1) so resistors that may heat up more, in a circuit, than others may require a smaller tolerance (1).	**(4)**

Question number	Answer	Additional guidance	Mark
7(c)	A calculation that includes: • correctly transposing formula (1) $R = \frac{V}{I}$ • correctly calculating voltage (1) $R = \frac{10}{20\ \text{mA}}$ or V = 12 − 2 • correct conversion mA to A (1) $R = \frac{10}{0.02\ \text{A}}$ • correct calculation (1) R = 500 Ω or 0.5 kΩ • correct percentage calculation 5% of 500 = 25 Ω • correct range (1) 475 Ω to 525 Ω	Award full marks for correct numerical answer without working. Allow ecf if candidate gets part of calculation wrong.	**(5)**

Question number	Answer	Additional guidance	Mark
7(d)	Any **two** explanations that include a reason (1), plus **two** linked reasons of that way (1) + (1). • ABS is tough (1) so will not crack or break under strain (1), which is necessary as the switch will be in constant use (1). • ABS is impact resistant (1) so it will not be damaged if knocked/dropped (1), which is important for a portable product, which is more likely to suffer shocks (1). • ABS is recyclable (1) so it can be reused in other products (1) which fits in with the environmentally friendly image of the product (1)	Accept all appropriate justification.	**(6)**

Question number	Answer	Mark
8(a)(i)	Any **one** explanation that includes an advantage (1) and a linked justification of that advantage (1). • Tin prevents oxidation/corrosion (1) so there will be better joints/solder will make a better connection (1). • Tin and zinc are malleable (1) so they will bend in the same way as copper without cracking (1).	**(2)**

Question number	Answer	Mark
8(a)(ii)	Any **one** explanation that includes a working property (1), plus **two** linked justifications of that working property (1) + (1). • More rigid than most polymers (1), which means that it protects the components/glass screen from damage (1) therefore allowing the user to keep in pocket/survives normal usage (1). • More lightweight than other metals (1), which means it is a lighter product (1), therefore it will be more portable (1).	**(3)**

Question number	Answer	Additional guidance	Mark
8(b)	Any **two** explanations that include a benefit (1) and a linked justification of that benefit (1). • Quicker than manual checks (1), therefore it does not slow down production (1). • It allows for 100% inspection (1), therefore all defects are detected (1). • Reduced human involvement (1), therefore reducing labour costs/wage bill (1).	Accept all appropriate justifications. Do **not** accept repeated points or justifications.	**(4)**

Question number	Indicative content	Mark
8(c)	**AO3 (9 marks)** Analysis of the earphones with respect to: • product is smaller – less material compared to other sound output devices • plastic components rely on non-renewable crude oil • use of smaller case/miniaturised electronics/SMT more sustainable • fused components/case is harder to disassemble for recycling and harder to reuse/maintain/repair • does not require separate power source, leading to lower power consumption • failure of customers to recycle electronic waste reliably increases chance of ending up in landfill • extraction of the metal ores/crude oil results in erosion of landscape • processing aluminium ore results in high greenhouse gas emissions • any waste aluminium from production can be recycled and reused • transportation of the aluminium/uses more fossil fuels for diesel and causes more $C0_2$ emissions • company may try to offset its carbon footprint to compensate for emissions made elsewhere in the manufacturing process.	**(9)**

Level	Mark	Descriptor
	0	No rewardable material.
Level 1	1–3	• Attempts to interrogate and deconstruct information but connections and logical chains of reasoning are flawed. • An unbalanced appraisal of the information/issues, containing judgements that show a limited awareness of the interrelationships between factors or competing arguments. • A conclusion may be presented but it is likely to be generic assertions rather than supported by relevant judgements.
Level 2	4–6	• Interrogates and deconstructs information and provides some connections and logical chains of reasoning. • A balanced appraisal of the information/issues, containing judgements that show an awareness of the interrelationships between factors or competing arguments. • A conclusion is presented that is partially supported by relevant judgements.
Level 3	7–9	• Interrogates and deconstructs information and provides sustained connections and logical chains of reasoning. • A well-balanced appraisal of the information/issues, containing judgements that show a thorough awareness of the interrelationships between factors or competing arguments. • A conclusion is presented that is fully supported by relevant judgements.

Write your name here

Surname	Other names

Pearson Edexcel
Level 1/Level 2 GCSE (9–1)

Centre Number | Candidate Number

Design and Technology

Component 1

Sample assessment material for first teaching
September 2017
Time: 1 hour 45 minutes

Paper Reference
1DT0/1E

You must have:
a calculator
a ruler

Total Marks

Instructions

- Use **black** ink or ball-point pen.
- **Fill in the boxes** at the top of this page with your name, centre number and candidate number.
- Answer **all** questions.
- Answer the questions in the spaces provided – *there may be more space than you need.*
- Any diagrams may NOT be accurately drawn, unless otherwise indicated.
- You must **show all your working out** with **your answer clearly identified** at the **end of your solution**.

Information

- The total mark for this paper is 100.
- The marks for **each** question are shown in brackets – *use this as a guide as to how much time to spend on each question.*

Advice

- Read each question carefully before you start to answer it.
- Try to answer every question.
- Check your answers if you have time at the end.

Turn over

S55253A

1/1

S 5 5 2 5 3 A 0 1 2 8

Pearson

SECTION A – CORE

Answer ALL questions. Write your answers in the spaces provided.

1 The materials that products are made from are chosen because of their characteristics.

(a) Figure 1 shows a table of products.

For each of the products shown, give a property of the material it is made from that makes the material suitable for the product.

The first one has been done for you.

Picture of product	Description of product	Property
 (Source: © Feng Yu/Shutterstock)	A polystyrene coffee cup	Good insulator of heat
 (Source: © 3DMAVR/Shutterstock)	A balsawood toy boat	(1) (i) .....
 (Source: © Anteromite/Shutterstock)	An aluminium paint tube	(1) (ii) .....
 (Source: © Morphart Creation/Shutterstock)	An acrylic bath	(1) (iii) .....

Picture of product	Description of product	Property
 (Source: © Borislav Bajkic/Shutterstock)	A fleece hat	**(1)** (iv) .....

Figure 1

(b) Figure 2 shows a coffee cup.

The manufacturers of the cup want to improve it by using temperature-responsive polymers.

(Source: © Feng Yu/Shutterstock)

Figure 2

Explain how temperature-responsive polymers could be used to improve the coffee cup.

(2)

.....

.....

.....

.....

(c) Figure 3 shows a cardboard sleeve around a coffee cup.

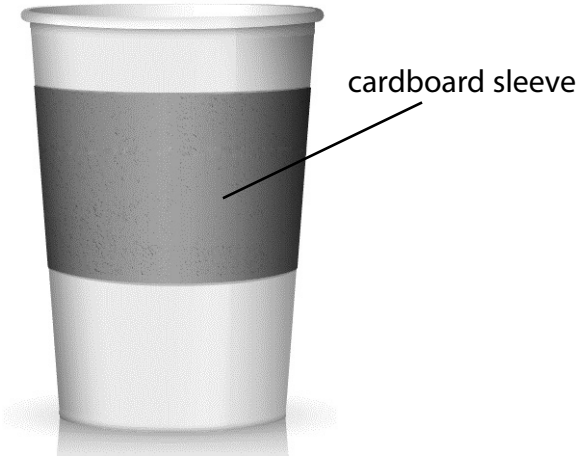

(Source: © Walking-onstreet/Shutterstock)

Figure 3

The sleeve is manufactured from corrugated cardboard.

Use notes and/or sketches to show the construction of corrugated cardboard.

You will be marked on how you apply your understanding of design and technology, not your graphical skills.

(2)

(Total for Question 1 = 8 marks)

2 Figure 4 shows an MDF square.

The MDF square will be covered with fabric to make a wall clock.

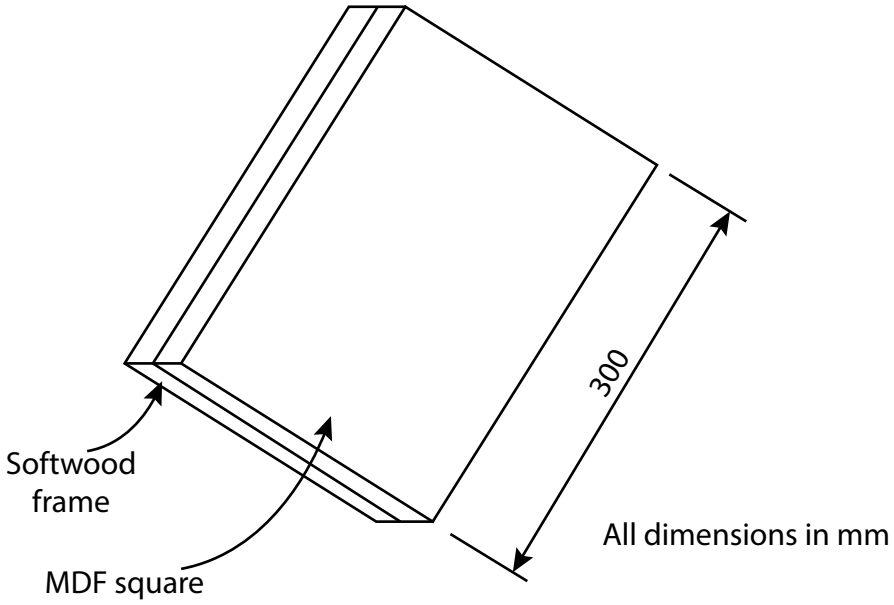

Figure 4

(a) Explain **one** benefit for the environment of using MDF rather than pine to make the wall clock.

(2)

.....

.....

.....

.....

(b) MDF is available in 61 cm × 122 cm sheets.

Calculate how many 300 mm × 300 mm squares can be cut from the available sheet.

(3)

.....

(c) The clock face is covered with a blended fibre fabric.

Explain **one** advantage of blending fibres to make fabrics.

(2)

.....

.....

.....

.....

(d) Figure 5 shows a clock mechanism.

(Source: www.clockparts.co.uk)

Figure 5

Explain **one** benefit to the clock manufacturer of buying the clock mechanisms as standard components.

(2)

.....

.....

.....

.....

(Total for Question 2 = 9 marks)

3 Levers are classified as class 1, 2 or 3.

(a) Figure 6 shows two different products, both are types of lever.

F is the fulcrum, E is the effort and L is the load.

For each of the products shown, name the type of lever.

Product	Type of lever
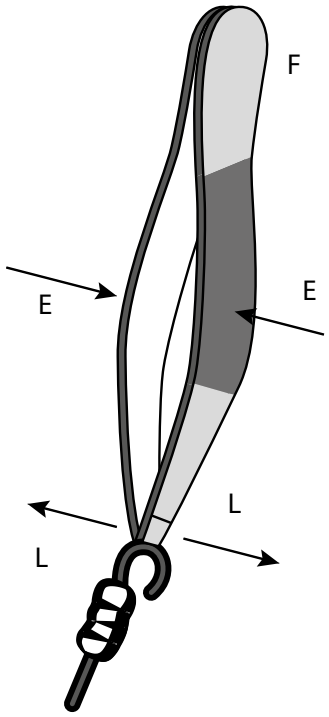 Tweezers	**(1)** (i) .....
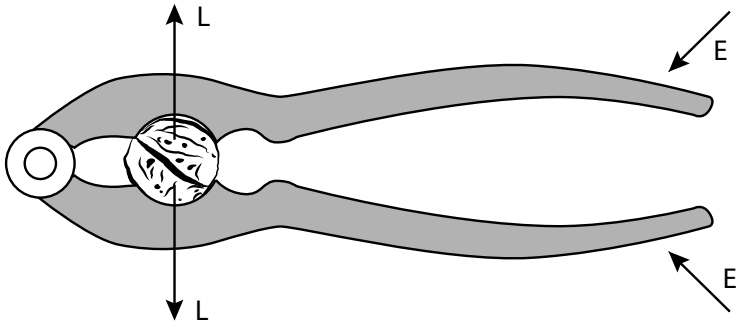 Nutcracker	**(1)** (ii) .....

Figure 6

(b) Figure 7 shows a loaded wheelbarrow.

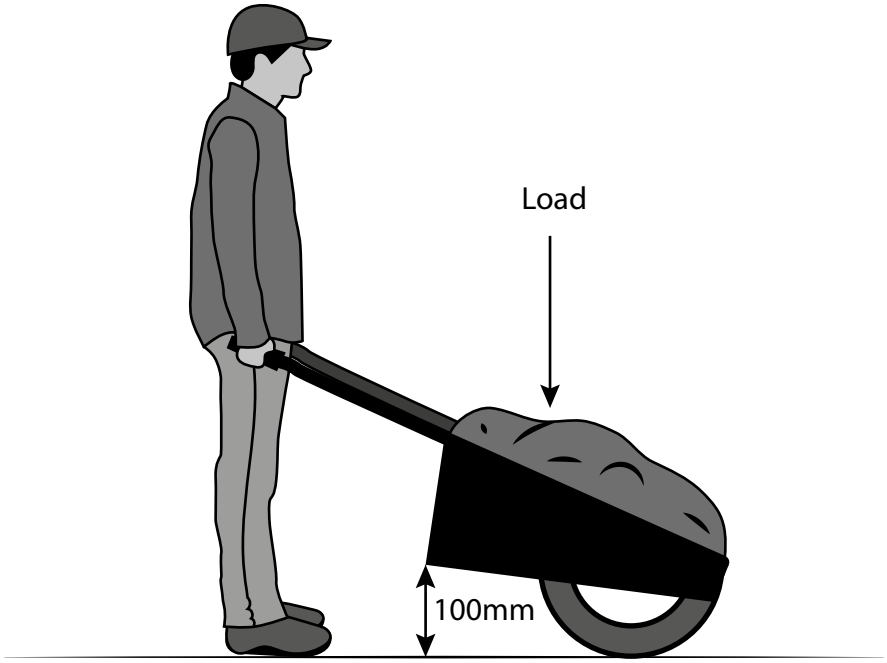

Figure 7

Mechanical advantage (MA) is calculated by:

$$MA = \frac{\text{load}}{\text{effort}}$$

The velocity ratio (VR) is 4 and the effort is 100 N.

The efficiency of the system is given by:

$$\text{Efficiency} = \frac{MA}{VR} \times 100\%$$

The system is 85% efficient.

Calculate the maximum load that can be lifted.

(3)

..... N

(c) Explain **one** reason why the length of the handles on the wheelbarrow would be increased.

(2)

.....

.....

.....

.....

(d) Explain **two** benefits that just-in-time (JIT) manufacturing could have for the manufacturer of the wheelbarrow.

(4)

1 .....

.....

.....

2 .....

.....

.....

(Total for Question 3 = 11 marks)

4 Figure 8 shows a gate.

The gate is moved by an electric motor in combination with a rack and pinion mechanism.

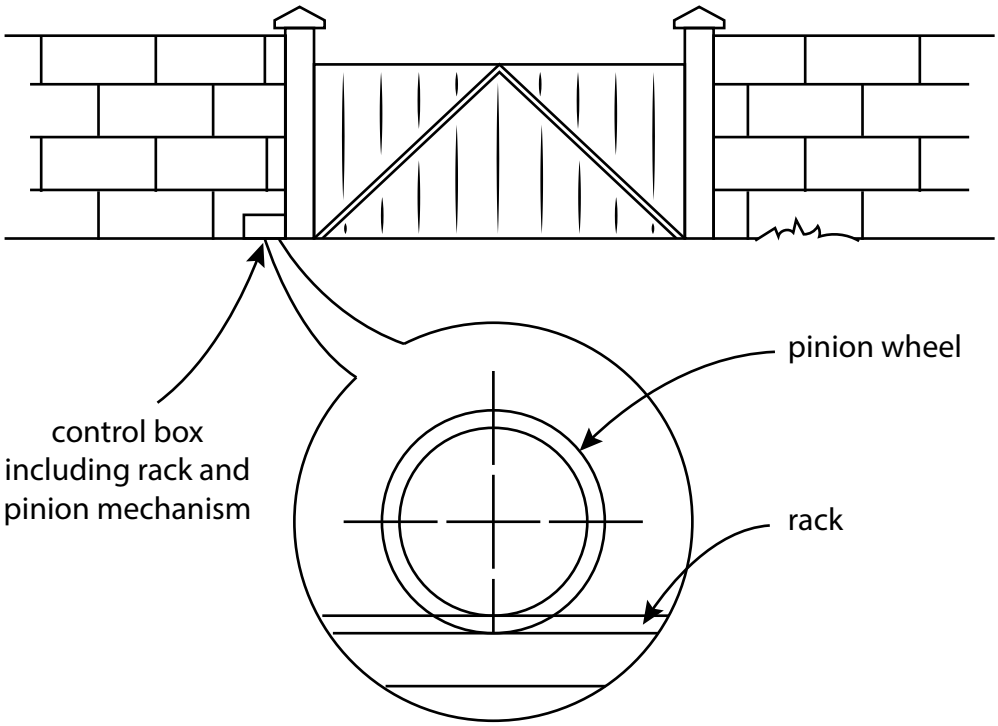

Figure 8

(a) Give **one** other application of a rack and pinion mechanism.

(1)

.....

(b) The gate needs to move 3 m to open fully.

The pinion wheel has a radius of 60 mm.

Calculate the number of revolutions the pinion wheel must rotate in order to open the gate fully.

Give your answer to the nearest whole number.

(4)

Use $\pi = 3.142$

Formula for circumference = πd

.....

(c) Figure 9 shows a graph of the approximate number of people employed in solar-power-related industries between 2012 and 2016.

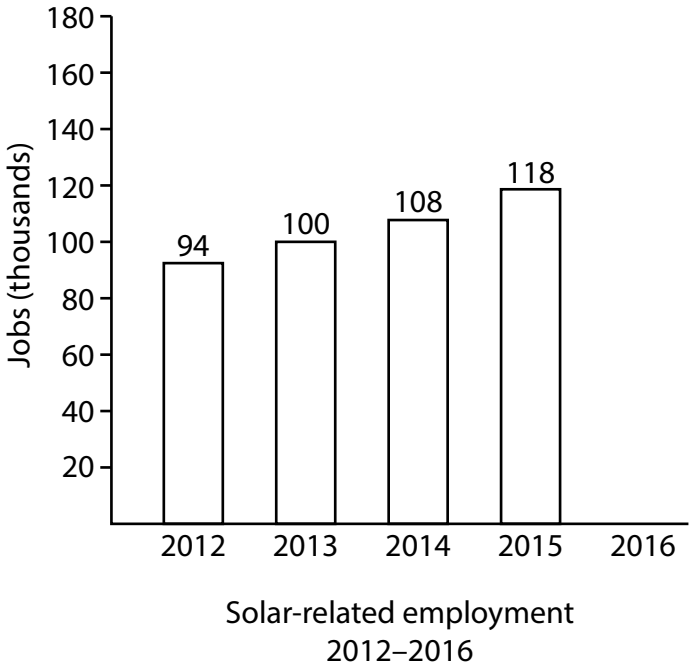

Figure 9

Analyse the graph.

Calculate the expected increase in the number of people employed in solar-power related industries in 2016, based on the current trend.

(1)

increase = ...

(d) The manufacturer considered two different power supplies to power the electric gates.

Figure 10 shows data for these power supplies.

Factor	Solar	Mains electricity
Storage method	Battery	None required on National Grid
Upfront costs	£6000	Nil
Cost per kwh	Nil	9.596 pence
Annual standing charge	Nil	£116

Figure 10

Analyse the data provided.

Discuss the issues that the manufacturer would need to consider when making the decision about which power supply to choose.

(6)

.....

.....

.....

.....

.....

.....

.....

.....

.....

.....

.....

.....

(Total for Question 4 = 12 marks)

TOTAL FOR SECTION A = 40 MARKS

SECTION B – TEXTILES

Answer ALL questions. Write your answers in the spaces provided.

5 Figure 11 shows a design solution and some additional information for a cyclist's vest.

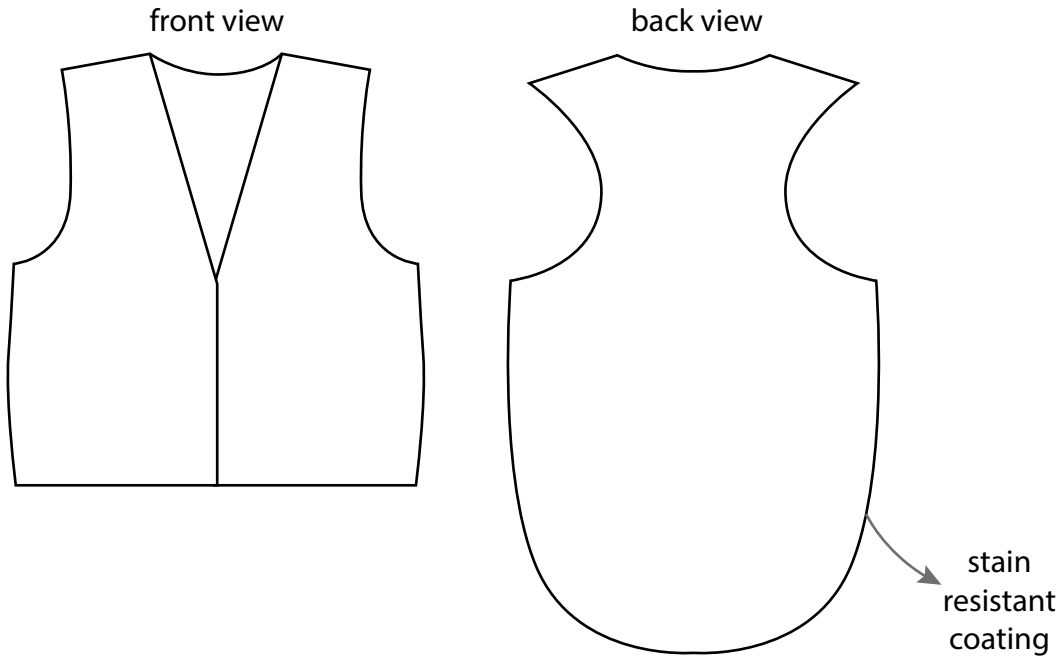

Additional information

Dimensions for puncture kit

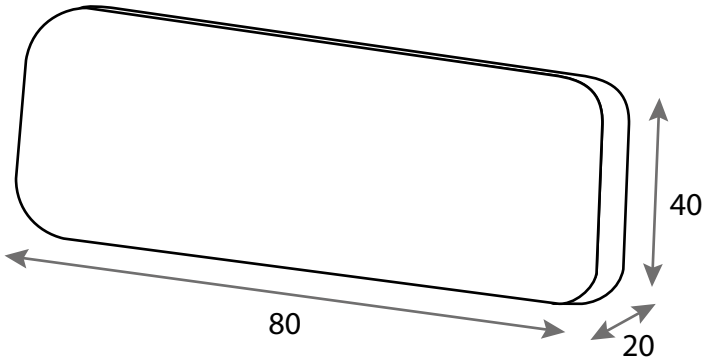

All dimensions are in millimetres.

Figure 11

(a) The cyclist's vest needs to be improved to include the following specification points.

The cyclist's vest must:

- be highly visible at night and in the day
- show the brand's logo 'TimeTravellers', using a batch-produced method
- be easy to put on and take off.

Use notes and/or sketches to show how the cyclist's vest could be modified to include these three specification points.

You will be marked on how you apply your understanding of design and technology, not your graphical skills.

Use the outline of the original design solution to show your modifications.

(6)

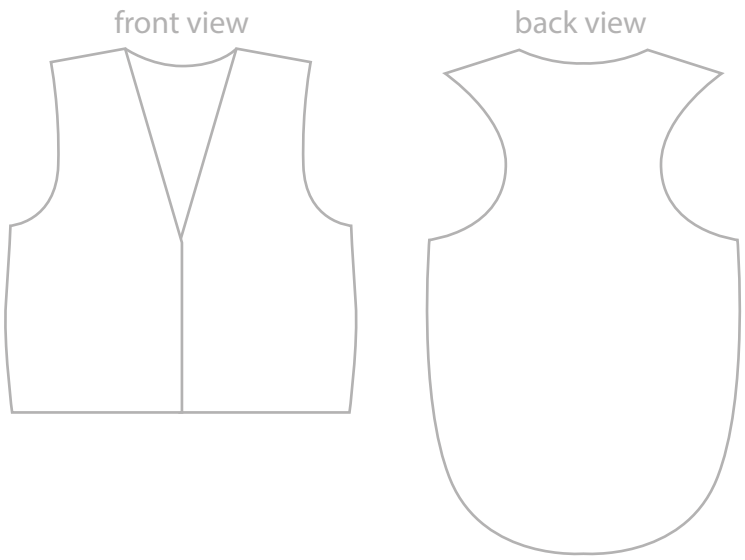

(b) Figure 12 shows a pair of cycling shorts.

The shorts must be comfortable to wear while cycling.

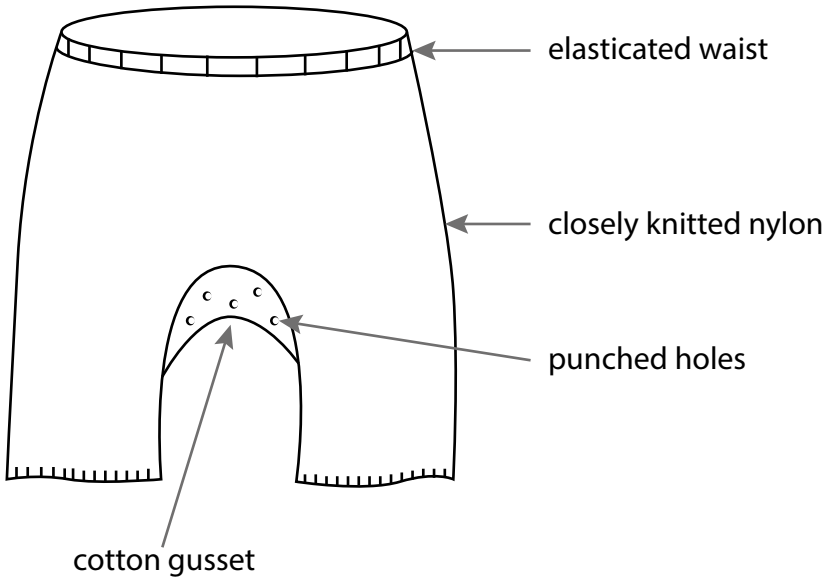

Figure 12

Analyse the cycling shorts.

Explain **two** ways in which the cycling shorts meet or fail to meet the criterion of being comfortable to wear while cycling.

(4)

1 .....

.....

.....

.....

2 .....

.....

.....

.....

(Total for Question 5 = 10 marks)

6 Figure 13 shows a school bag.

The bag is being made as a one-off prototype.

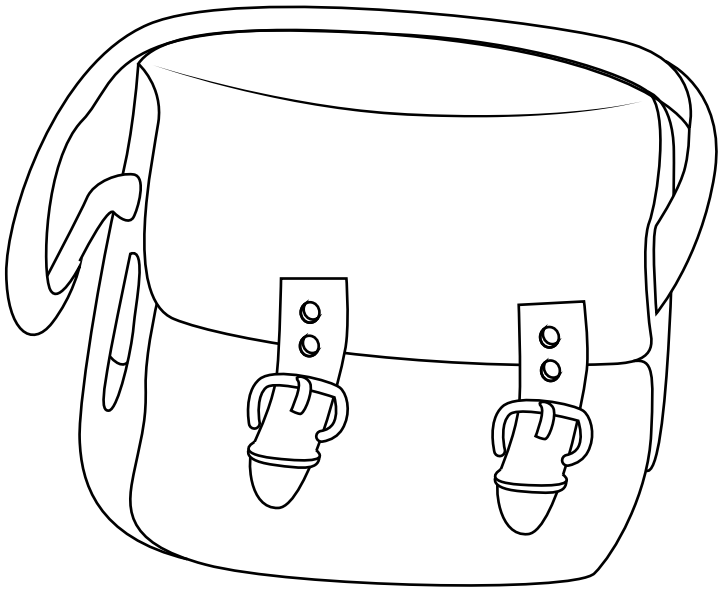

front view

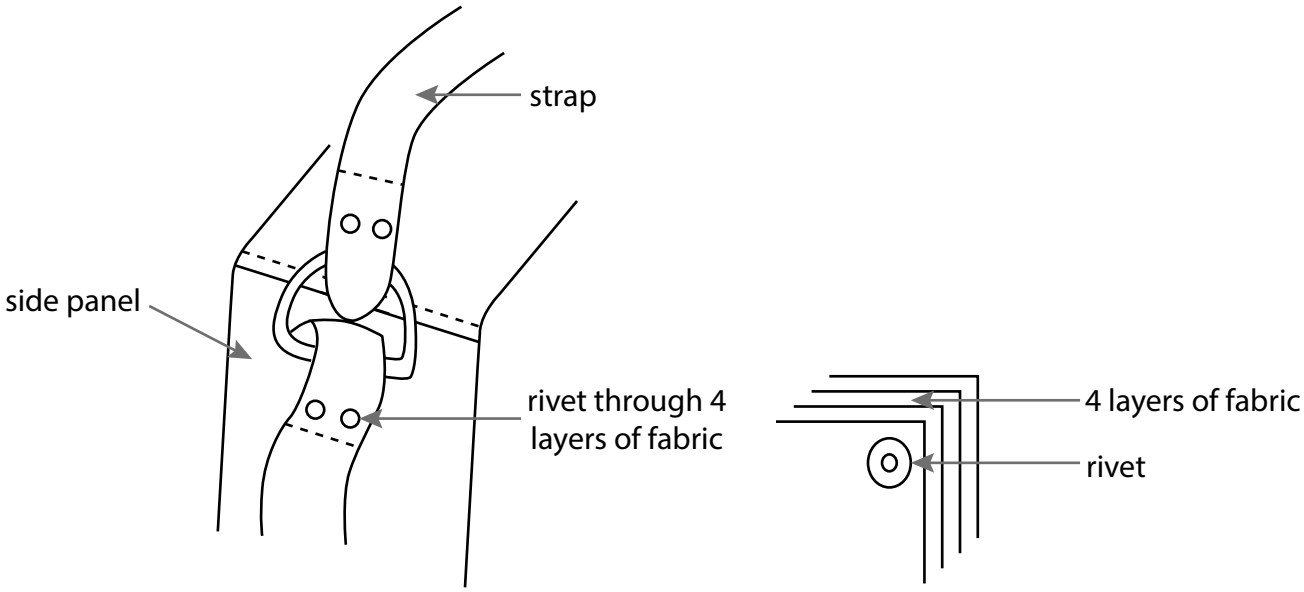

Figure 13

(a) (i) Figure 14 shows a D ring.

Explain **one** reason why a D ring was used in the manufacture of the school bag.

(2)

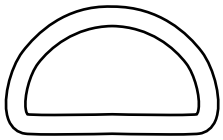

Figure 14

.....

.....

.....

.....

(ii) Explain **one** reason why the rivets were used in the manufacture of the school bag.

(2)

.....

.....

.....

.....

(b) Figure 15 shows piping.

The piping has been added to the strap of the school bag.

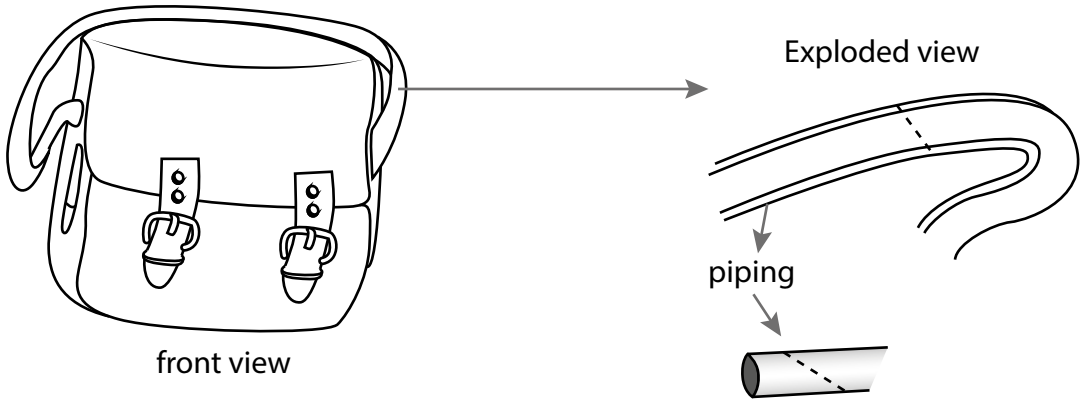

Figure 15

Use notes and/or sketches to show the process of constructing and inserting the piping onto the strap of the school bag.

You will be marked on how you apply your understanding of design and technology, not your graphical skills.

(4)

(c) Explain **one** reason why the piping was added to the strap of the school bag.

(2)

.....

.....

.....

.....

(d) The school bag is going to be mass produced with the school logo printed on each bag.

Name **two** methods that can be used to mass produce the logo for the school bag.

For each method, explain one advantage to the manufacturer of using this method.

(6)

Method 1

.....

Explanation

.....

.....

.....

.....

.....

Method 2

.....

Explanation

.....

.....

.....

.....

.....

(Total for Question 6 = 16 marks)

7 Figure 16 shows a soft toy.

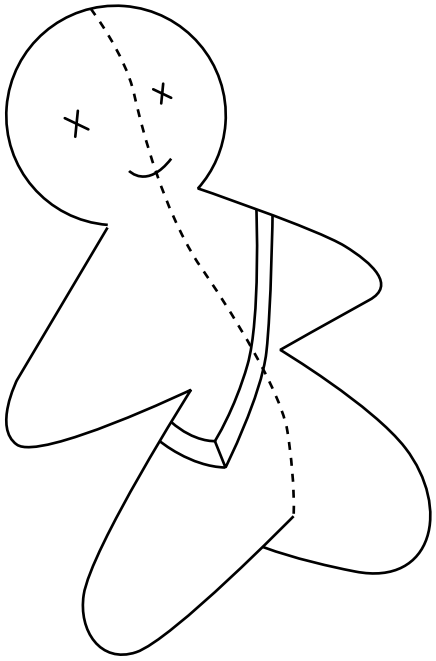

Figure 16

(a) The edges of the sash worn across the soft toy have been attached at an angle.

Give **one** method of increasing the strength of the sash.

(1)

.....

(b) The manufacturer is considering making the soft toy out of knitted nylon from a range of denier stock sizes.

Explain **two** reasons why denier stock sizes must be carefully considered in the production of the soft toy.

(4)

1 .....

.....

.....

.....

2 .....

.....

.....

.....

(c) Figure 17 shows the dimensions for the back panel of the soft toy.

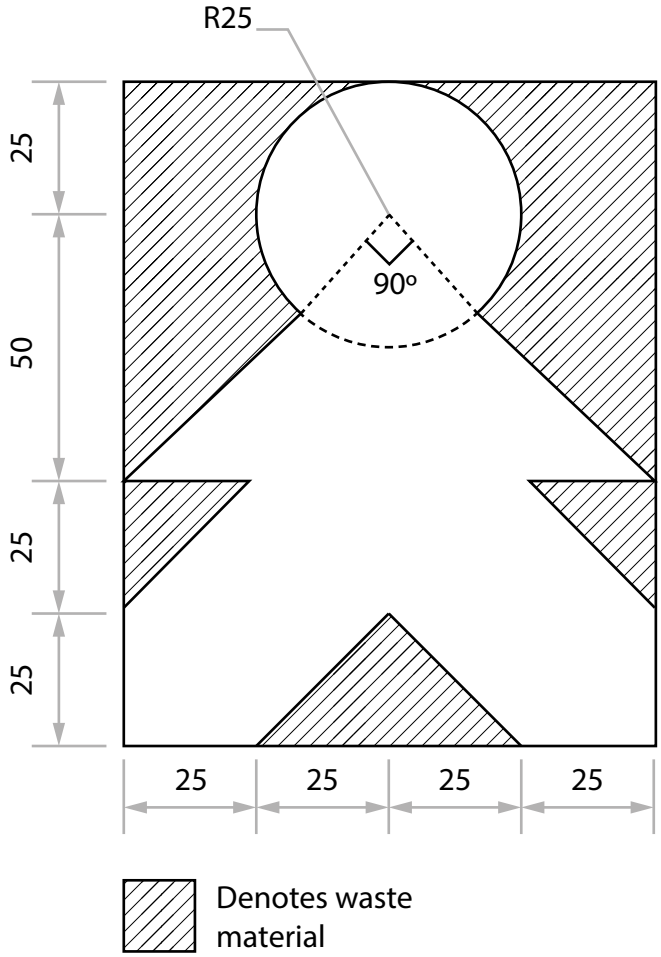

All dimensions are in mm.

Figure 17

Calculate how much fabric is wasted from the whole piece, in cm2.

Give your answer to 2 decimal places.

Area of a circle = $\pi \times r^2$

Area of a triangle = ½ × base × height

Use $\pi = 3.142$

(5)

..... cm²

(d) The soft toy's fabric has been micro-encapsulated with medicine.

Explain **two** other ways in which micro-encapsulation can be used in the soft toy's fabric.

(6)

1 .....

.....

.....

.....

.....

.....

2 .....

.....

.....

.....

.....

.....

(Total for Question 7 = 16 marks)

8 Figure 18 shows a dress.

(Source: © sergeevana/Shutterstock)

Figure 18

(a) (i) Explain **one** reason why a stain-resistant finish was applied to the dress.

(2)

.....

.....

.....

.....

(ii) The dress is made from nylon.

Explain **one** working property of nylon that makes it suitable for the dress.

(3)

.....

.....

.....

.....

.....

(b) The dress has an invisible zip inserted at the back.

Explain **two** quality-control checks that would be carried out on the invisible zip during the manufacturing process.

(4)

1 .....

.....

.....

.....

2 .....

.....

.....

.....

(c) A dress is to be sold in the UK as part of a formal-wear range.

Figure 19 shows the dress and some additional information about the dress.

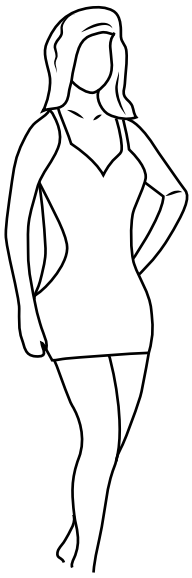

Dress	
Type of fibre – Mulberry silk	Source – China
Length – upper thigh	Spaghetti straps
Colour – neon green	Other features – cut-out sides

Figure 19

Analyse the information in Figure 19.

Evaluate the dress with reference to its ethical value.

(9)

.....

.....

.....

.....

.....

.....

.....

.....

(Total for Question 8 = 18 marks)

TOTAL FOR SECTION B = 60 MARKS
TOTAL FOR PAPER = 100 MARKS

Component 1 mark scheme – 1DT0/1E

Section A – Core content

Question number	Answer	Mark
1(a)(i)	Any **one** property from: • lightweight (1) • soft (1) • low density (1).	**(1)**

Question number	Answer	Mark
1(a)(ii)	Any **one** property from: • ductile (1) • malleable (1) • non-corrosive/will not rust (1) • non-reactive with paint (1).	**(1)**

Question number	Answer	Mark
1(a)(iii)	Any **one** property from: • waterproof (1) • plasticity (1) • electrical insulator (1).	**(1)**

Question number	Answer	Mark
1(a)(iv)	Any **one** property from: • lightweight (1) • soft (1) • good water resistance/hydrophobic (1) • good insulator of heat (1)	**(1)**

Question number	Answer	Additional guidance	Mark
1(b)	Any **one** explanation that includes a method of use (1) and a linked justification of that use (1). • The temperature-responsive polymers could give an indication of when it is safe to drink (1) as they will change colour when hot/cool (1). • The temperature-responsive polymers can be used as an aesthetic feature (1), as any logos/images will change colour when hot/cool (1).	Do not award a single mark for simply saying 'they could be used'.	**(2)**

Question number	Answer	Mark
1(c)	**Marks will be awarded for understanding of design and technology, not graphical skills.** Notes and/or sketches that include: • flat linerboard/outer/inner surface (1) • fluted corrugated sheet (1). Example of candidate response: 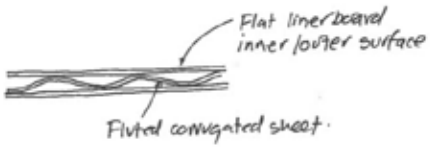	**(2)**

Question number	Answer	Mark
2(a)	Any **one** explanation that includes a benefit (1) and a linked justification of that benefit (1). • MDF is made from waste material (1), therefore the waste will not need to go to landfill/be dumped (1). • Using MDF will reduce the amount of natural timber being consumed/cut down (1), therefore pine as a natural resource will last longer/be put to better use (1).	**(2)**

Question number	Answer	Additional guidance	Mark
2(b)	A calculation that includes: • conversion of units (1) • correct number of whole pieces by dimension (1) • correct sum (1). 300 mm = 30 cm (1) $\frac{61}{30}$ = 2 whole cuts $\frac{122}{30}$ = 4 whole cuts (1) 2 × 4 = 8 whole cuts (1)	Award full marks for correct numerical answer without working. Allow ecf if candidate gets part of calculation wrong.	**(3)**

Question number	Answer	Mark
2(c)	Any **one** explanation that includes an advantage (1) and a linked justification of that advantage (1). • Blended fibres combine the properties of the original fibres (1), therefore the properties can be improved/enhanced (1). • Combing/blending fibres allows cheaper fibres to be incorporated (1), therefore the overall cost of the fabric will be reduced (1). • The appearance/performance of the fabric can be improved/enhanced (1), therefore it is more attractive/appealing to the end user (1). Do not accept cheap on its own, unless qualified.	**(2)**

Question number	Answer	Mark
2(d)	Any **one** explanation that includes a benefit (1) and a linked justification of that benefit (1). • They will/may not be able to make the clock mechanism themselves (1), therefore they do not need to invest in specialist machinery/training/workforce (1). • They will be made by a specialist (1), therefore they will come with a guarantee/ensure quality (1).	**(2)**

Question number	Answer	Mark
3(a)(i)	Type 3	**(1)**

Question number	Answer	Mark
3(a)(ii)	Type 2	**(1)**

Question number	Answer	Additional guidance	Mark
3(b)	A calculation that includes: • transposition of formula and calculation to show MA ÷ VR = 0.85 (1) • transposition of formula to show MA = 3.4 (1) • transposition of MA formula and calculation of load = 340 N (1). $\text{Efficiency} = \frac{MA}{VR} \times 100\%$ $\frac{MA}{VR} = 0.85$ (1) VR × 0.85 = MA VR = 4 MA = 4 × 0.85 = 3.4 (1) Effort = 100 $MA = \frac{\text{load}}{\text{effort}}$ $3.4 = \frac{\text{load}}{100}$ load = 100 × 3.4 = 340 N (1)	Award full marks for correct numerical answer without working. Allow ecf if candidate gets part of calculation wrong.	**(3)**

Question number	Answer	Mark
3(c)	Any **one** explanation that includes a benefit (1) and a linked justification of that benefit (1). • This will increase the mechanical advantage (1), therefore making it easier to lift the wheelbarrow (1). • A greater load/weight can be lifted (1) because there is greater leverage (1).	**(2)**

Question number	Answer	Mark
3(d)	Any **two** explanations that include a benefit (1) and a linked justification of that benefit (1). • They will have much less material in stock (1), therefore they have less money tied up/invested in materials they are not using (1). • They do not have to employ staff on permanent contracts (1), therefore they can employ staff as and when required, reducing the wage bill (1). • Once the wheelbarrows have been manufactured they are shipped out (1), therefore no expensive storage/warehouse required.	**(4)**

Question number	Answer	Mark
4(a)	Any **one** application from: • steering mechanism (1) • slush/lock gate (1) • pillar drilling machine (1) • lathe bed/saddle slide (1).	**(1)**

Question number	Answer	Additional guidance	Mark
4(b)	A calculation that includes: • calculation of circumference (1) • conversion of units: 3 m to 3000 mm (1) • correct sum = 7.96 (1) • 8 whole turns (1). $C = \pi d$ = 3.142 × 120 = 377.04 mm (1) 3 m = 3000 mm (1) $\frac{3000}{377.04} = 7.96$ (1) = 8 whole turns (1)	Award full marks for correct numerical answer without working. Allow ecf if candidate gets part of calculation wrong.	**(4)**

Question number	Answer	Mark
4(c)	12/12 thousand/12 000	**(1)**

Question number	Indicative content	Mark
4(d)	**AO3 (6 marks)** • Solar power is expensive to set up. • Solar power is free once installed. • Limited by sunlight hours. • Batteries lose ability to charge/recharge over time. • Mains power incurs a flat fee every year even if you do not use it. • Every time you open/close the gates it will cost you money if using mains power. • Power lines can be blown down in the wind, which means you cannot operate the gate in a power cut, therefore you may be shut in/out of your house. • Installing power lines is very expensive in remote areas, which means it might be prohibitively expensive to install them, therefore making solar power a more viable option. • If the solar exposure is low the batteries might not charge up enough, which means there might not be sufficient power to open/close the gates. • The standing charge is a flat fee that has to be paid, which means if you are away for a long period of time and do not use the gates, you still have to pay the charge, which will be a waste of money.	**(6)**

Level	Mark	Descriptor
	0	No rewardable material.
Level 1	1–2	• Attempts to interrogate and deconstruct information but connections and logical chains of reasoning are flawed. • An unbalanced appraisal of the information/issues, containing judgements that show a limited awareness of the interrelationships between factors or competing arguments.
Level 2	3–4	• Interrogates and deconstructs information and provides some connections and logical chains of reasoning. • A balanced appraisal of the information/issues, containing judgements that show an awareness of the interrelationships between factors or competing arguments.
Level 3	5–6	• Interrogates and deconstructs information and provides sustained connections and logical chains of reasoning. • A well-balanced appraisal of the information/issues, containing judgements that show a thorough awareness of the interrelationships between factors or competing arguments.

Section B – Textiles

Question number	Answer	Mark
5(a)	**Marks will be awarded for understanding of design and technology, not graphical skills.** Notes and/or sketches that include: • being highly visible at night (1) and in the day (1), e.g.: **visible at night** – reflective strips are silver-coated inks that make a backing for prisms or beads, which reflect the light back to the source/beads focus the light making the reflection seem more concentrated and brighter/phosphorescent (PCM) (1) Example of candidate response: ○ uses dye pigments that will store light in the day and reflect it back at night when light is shone on it, so the wearer can be seen (safety) in the dark (1) ○ ensures that light is reflected safely so that it does not daze those around the reflective strips but will only show up to those viewers in the line of sight of light source, e.g. headlights (1) **visible in the day –** bright colours/florescent dyes are those that stand out and allow the wearer to be easily identified (1), colours that are bright tend to be light, strong and grab attention, making them more noticeable in the dark (safety), fluorescent colours/use minerals that emit light visible (glow) when exposed to ultraviolet (sunlight) (1) • show the brand's logo 'TimeTravellers' (1), using a batch-produced method (1), e.g.: **provide space for** 'TimeTravellers' using a batch-produced method – printing – transfer, roller screen/engraved/laser cut/ appliqué/machine embroidery/woven into fabric – jacquard (1) as these can be reproduced using CAD/CAM to make designing, manufacturing and quality control more efficient and accurate (1) *Do not accept hand methods such as 'block', 'labels' on their own without a link to a manufacturing method or 3D printing as it is presently a slow production method in volume* • be easy to put on (1) and take off (1), e.g.: **easy to put on and take off** – wide neck/loose sleeves/lack of fastenings/Velcro™/zip/poppers/snap/stud fasteners/clip (1) as they provide less resistance to being open or closed/are less fiddly/have fewer components to do up and release (1).	(6)

Question number	Answer	Mark
5(a) continued	Example of candidate response:  Annotated notes: Velcro fastener easy to open and close. Toggle to secure kit. Printed with reflective inks for nightime safety. Bright orange to be seen in the day.	

Question number	Answer	Additional guidance	Mark
5(b)	Any **two** explanations that include a way (1) and a linked justification of that way (1). • The construction of knitted nylon/elasticated waist allows the cycling shorts to be stretchy, which means that it expands with the wearer (1), this is good as when the cyclist is moving the fabric will not restrict, form uncomfortable bulky creases or pinch in use (1). • The fibre content of cotton (gusset) fabric/punched holes will allow air to circulate in a place where air flow is restricted and sweat builds up (1), so the user benefits from improved temperature control and less chance of irritation caused from excess moisture (1).	Do not accept nylon fibre as a positive in regards to stretching.	**(4)**

Question number	Answer	Mark
6(a)(i)	Any **one** explanation that includes a reason (1) and a linked justification of that reason (1). • The straps of the bag can break/weaken without support (1), therefore the D ring provides a component that gives additional strength/flexibility to the strap (1). • The D ring can be used as a method of adjusting the straps (1), therefore the straps can suit a range of sizes (1).	**(2)**

Question number	Answer	Mark
6(a)(ii)	Any **one** explanation that includes a reason (1) and a linked justification of that reason (1). • The rivet would be used where the build-up of fabric is too great to be sewn (1), therefore it will produce a secure fastening through all layers (1). • The rivet is a strong component that needs to be hammered or punched into place (1), therefore this provides a durable/hard-wearing fastening that secures the fabric (1).	**(2)**

Question number	Answer	Mark
6(b)	**Marks will be awarded for understanding of design and technology, not graphical skills.** Notes and/or sketches that include: • cut fabric for piping on the bias (1) • join at 90° (1) • fold strip in half, length ways (1) • use of sewing machine to sandwich piping in between the two layers of straps (1). Example of candidate response: 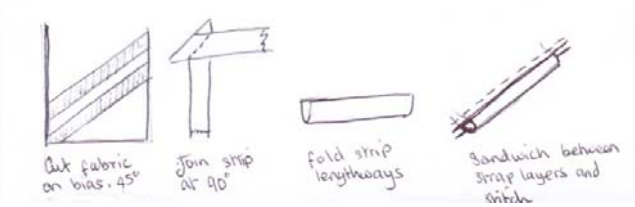 Annotated notes: Cut fabric on bias, 45°. Join strip at 90°. Fold strip lengthways. Sandwich between strap layers and stitch.	**(4)**

Question number	Answer	Mark
6(c)	Any **one** explanation that includes a reason (1) and a linked justification of that reason (1). • Piping is a decorative component (1), therefore improving/increasing aesthetics (1). • Piping adds strength to strap (1), therefore making the strap less flexible/increasing rigidity/durability/reduces fraying/wearing (1).	**(2)**

Question number	Answer	Additional guidance	Mark
6(d)	Any **two** explanations that include a reason (1) plus **two** linked justifications of that reason (1) + (1). • Rotary screen printing (1) achieves a more consistent ink flow/pressure (1), so outcomes have less rejections (1). • Flatbed screen printing (1) allows for a range of colours to be applied/complex logo to be printed (1), therefore identical designs can be created (1).	Do not accept any reference to hand/dye technique or classroom/ workshop methods, e.g. stencilling. Accept any logical order of points. These can be mixed or matched from any bullet point only once.	**(6)**

Question number	Answer	Additional guidance	Mark
7(a)	Any **one** method from: • using a strong seam type such as felled seam (1) • inserting interfacing (fusible or stitched) (1) • finishing raw edges by overlocking or zig zagged (1) • using strengthening stitching methods such as double or top stitching (1).	Allow any appropriate examples of strong seams, methods of finishing and stitching methods.	**(1)**

Question number	Answer	Mark
7(b)	Any **two** explanations that include a reason (1) and a linked justification of that reason (1). • The fabric should be strong enough to resist play without laddering/tearing quickly (1), therefore this will give value for money/greater consumer satisfaction (1). • The opaqueness of the denier will mean the interior/stuffing will not show (1), therefore leading to a more aesthetically pleasing product/hiding the less visually pleasing appealing stuffing (1). • The lower the denier the more delicate/fragile the fabric, which means that it will need to be handled and constructed with more care than a higher count (1) because this can lead to quality issues in the production and aftercare (1).	**(4)**

Question number	Answer	Additional guidance	Mark
7(c)	A calculation that includes: • conversion of units from mm to cm before further calculations • calculation of total area = 125 cm^2 (1) • calculation of area wasted below the arms: area of the triangle under the legs = 6.25 cm^2 (1) area of the triangles under arms = 6.25 cm^2 • calculation of wasted area above arms: area used = area of the triangle + area of the rest of the head = 25 + 14.728 = 39.728 cm^2 (1) area wasted = 75 – 39.728 = 35.272 cm^2 (1) • total area wasted given to 2 d.p.: total area – total area used = 77.23 cm^2 (1).	Do not award the final mark if the answer is still in mm^2. Award full marks for correct numerical answer without working. Allow ecf if candidate gets part of calculation wrong.	**(5)**

Question number	Answer	Additional guidance	Mark
7(d)	Any **two** explanations that include a way (1), plus **two** linked justifications of that way (1) + (1). • Scent – releases scents to freshen the toy's smell as the child plays with it (1) because the toy can gain an unpleasant smell through play and the micro-encapsulation scent prevents this (1), therefore allowing the fabric to be deodorised/removing odours from the fabric (1). • Scent – releases aromatherapy aromas to comfort the child as it plays with the toy (1), therefore allowing the child to have a greater sense of wellbeing (1), also because scent is embedded/encapsulated in the fabric it will last as the toy ages (even after washing) (1). • Hygiene – as the child handles the toy it releases antibacterial substances that starve the bacteria to keep the toy clean (1), therefore allowing an antibacterial substance to coat the toy (1), which means that the toy becomes more hygienic (safer to play with) as it comes into contact with other things that can make it dirty through child play (1).	Allow for any logical combination of bullet points. These must be credited only once.	**(6)**

Question number	Answer	Mark
8(a)(i)	Any **one** explanation that includes an advantage (1) and a linked justification of that advantage (1). • The stain resist will protect the fabric (1), therefore making it more durable/will last longer/will not absorb any liquids/dirt/be more comfortable (1). • The stain resist will improve/enhance the fabric's visual appeal (1), therefore keeping it more attractive to purchasers as a selling point (1).	**(2)**

Question number	Answer	Additional guidance	Mark
8(a)(ii)	Any **one** explanation that includes a working property (1), plus **two** linked justifications of that working property (1) + (1). • Nylon is a durable fibre (1), which means it will withstand physical use without easily ripping (1), therefore it is good value for money as it will show less wear and tear/abrasion (1). • Nylon is non-absorbent/water resistant (1), which means it will not hold water and add to the weight of the dress/will dry quickly when washed (1), therefore making it easier to care for when laundering (1).	Do not accept 'smooth' based on fabric-related comments, e.g. construction method, fit, colour. Accept any relevant and correct working properties and explanations.	**(3)**

Question number	Answer	Additional guidance	Mark
8(b)	Any **two** explanations that include a quality-control check (1) and a linked justification of that quality-control check (1). • Check that the zipper tape has been pressed flat or ensure teeth are uncurled/retracted (1) so that zipper foot stitches closely/so that the outside of the fabric is not caught (1). • Check that the end of the zipper tape is sewn onto the seam allowance (1) to ensure that it does not flap up/cause the wearer discomfort (1).	Do not accept generic checks that refer to inserting a standard zip, e.g. basting closed seam.	**(4)**

Question number	Indicative content	Mark
8(c)	**AO3 (9 marks)** • The short length of skirt, tight fitting and low neckline are very revealing as they show a lot of skin, this can be seen as lacking in modesty and inappropriate for a formal event. • The colour is bold and eye catching, allowing this dress to stand out and bring to attention its other, more revealing features such as the cut-outs and spaghetti straps. The use of silk fibre can be seen as unethical as: • the Bombyx mori caterpillar cannot survive in the wild now, only by being farmed. This is due to prolonged domestication so that it cannot live without human intervention, it would simply starve • the Bombyx mori evolved to its new (farmed) circumstances, which meant it was domesticated, fed and cared for. However, this meant that in its adaptation it lost the ability to eat due to undeveloped structures within the mouth • although wild silk is available, which can be harvested after the moth has emerged from the cocoon, this is highly labour intensive, delicate work and children are often used for the task. The workers often work in the fields where conditions are not monitored from a health and safety perspective • wild silk has damaged cocoons as the moth has eaten its way out, while the Bombyx mori silkworms are killed as larvae before having a chance to emerge, which is seen as cruel by many including vegetarians and vegans • silk requires harsh, intensive treatments and chemicals to clean it, which pollute ground water that humans, plant life and animals rely on • habitats are lost as a result of the extensive amount of land needed for mulberry tree farms to produce a relatively small yield of silk • a lot of fuel/energy consumed in bringing the fibre to Europe/UK.	**(9)**

Level	Mark	Descriptor
	0	No rewardable material.
Level 1	1–3	• Attempts to interrogate and deconstruct information but connections and logical chains of reasoning are flawed. • An unbalanced appraisal of the information/issues, containing judgements that show a limited awareness of the interrelationships between factors or competing arguments. • A conclusion may be presented but it is likely to be generic assertions rather than supported by relevant judgements.
Level 2	4–6	• Interrogates and deconstructs information and provides some connections and logical chains of reasoning. • A balanced appraisal of the information/issues, containing judgements that show an awareness of the interrelationships between factors or competing arguments. • A conclusion is presented that is partially supported by relevant judgements.
Level 3	7–9	• Interrogates and deconstructs information and provides sustained connections and logical chains of reasoning. • A well-balanced appraisal of the information/issues, containing judgements that show a thorough awareness of the interrelationships between factors or competing arguments. • A conclusion is presented that is fully supported by relevant judgements.

Write your name here

Surname	Other names

Pearson Edexcel
Level 1/Level 2 GCSE (9–1)

Centre Number | Candidate Number

Design and Technology

Component 1

Sample assessment material for first teaching
September 2017
Time: 1 hour 45 minutes

Paper Reference
1DT0/1F

You must have:
a calculator
a ruler

Total Marks

Instructions

- Use **black** ink or ball-point pen.
- **Fill in the boxes** at the top of this page with your name, centre number and candidate number.
- Answer **all** questions.
- Answer the questions in the spaces provided – *there may be more space than you need.*
- Any diagrams may NOT be accurately drawn, unless otherwise indicated.
- You must **show all your working out** with **your answer clearly identified** at the **end of your solution**.

Information

- The total mark for this paper is 100.
- The marks for **each** question are shown in brackets – *use this as a guide as to how much time to spend on each question.*

Advice

- Read each question carefully before you start to answer it.
- Try to answer every question.
- Check your answers if you have time at the end.

Turn over

S55254A

1/1

S 5 5 2 5 4 A 0 1 2 9

Pearson

SECTION A – CORE

Answer ALL questions. Write your answers in the spaces provided.

1 The materials that products are made from are chosen because of their characteristics.

(a) Figure 1 shows a table of products.

For each of the products shown, give a property of the material it is made from that makes the material suitable for the product.

The first one has been done for you.

Picture of product	Description of product	Property
 (Source: © Feng Yu/Shutterstock)	A polystyrene coffee cup	Good insulator of heat
 (Source: © 3DMAVR/Shutterstock)	A balsawood toy boat	(1) (i) .....
 (Source: © Anteromite/Shutterstock)	An aluminium paint tube	(1) (ii) .....
 (Source: © Morphart Creation/Shutterstock)	An acrylic bath	(1) (iii) .....

Picture of product	Description of product	Property
 (Source: © Borislav Bajkic/Shutterstock)	A fleece hat	(1) (iv) .....

Figure 1

(b) Figure 2 shows a coffee cup.

The manufacturers of the cup want to improve it by using temperature-responsive polymers.

(Source: © Feng Yu/Shutterstock)

Figure 2

Explain how temperature-responsive polymers could be used to improve the coffee cup.

(2)

.....

.....

.....

.....

(c) Figure 3 shows a cardboard sleeve around a coffee cup.

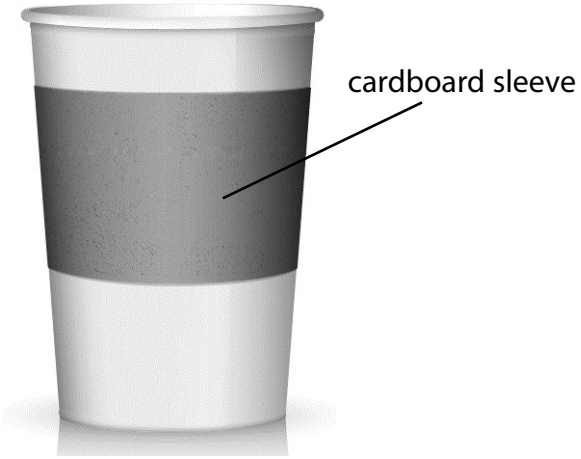

(Source: © Walking-onstreet/Shutterstock)

Figure 3

The sleeve is manufactured from corrugated cardboard.

Use notes and/or sketches to show the construction of corrugated cardboard.

You will be marked on how you apply your understanding of design and technology, not your graphical skills.

(2)

(Total for Question 1 = 8 marks)

2 Figure 4 shows an MDF square.

The MDF square will be covered with fabric to make a wall clock.

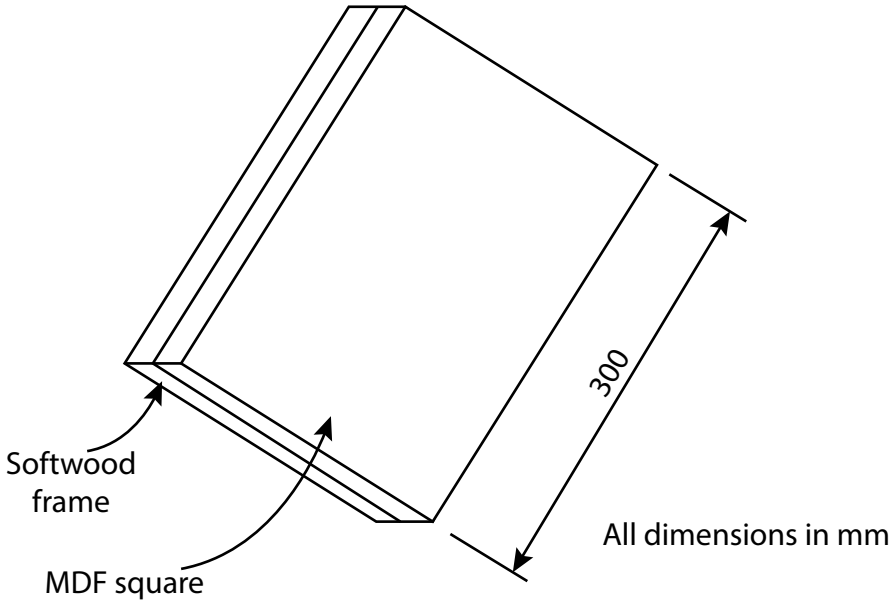

Figure 4

(a) Explain **one** benefit for the environment of using MDF rather than pine to make the wall clock.

(2)

.....

.....

.....

.....

(b) MDF is available in 61 cm × 122 cm sheets.

Calculate how many 300 mm × 300 mm squares can be cut from the available sheet.

(3)

.....

(c) The clock face is covered with a blended fibre fabric.

Explain **one** advantage of blending fibres to make fabrics.

(2)

.....

.....

.....

.....

(d) Figure 5 shows a clock mechanism.

(Source: www.clockparts.co.uk)

Figure 5

Explain **one** benefit to the clock manufacturer of buying the clock mechanisms as standard components.

(2)

.....

.....

.....

.....

(Total for Question 2 = 9 marks)

3 Levers are classified as class 1, 2 or 3.

(a) Figure 6 shows two different products, both are types of lever.

F is the fulcrum, E is the effort and L is the load.

For each of the products shown, name the type of lever.

Product	Type of lever
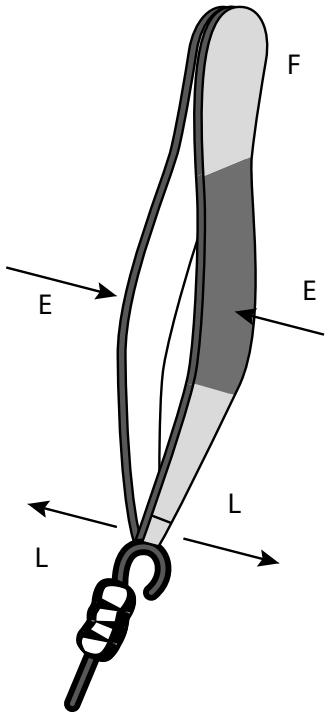 Tweezers	**(1)** (i) .....
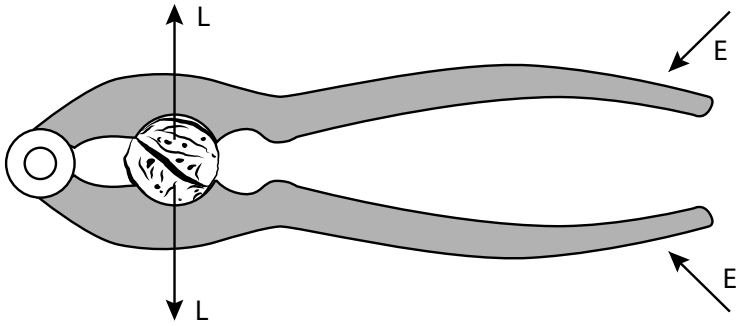 Nutcracker	**(1)** (ii) .....

Figure 6

(b) Figure 7 shows a loaded wheelbarrow.

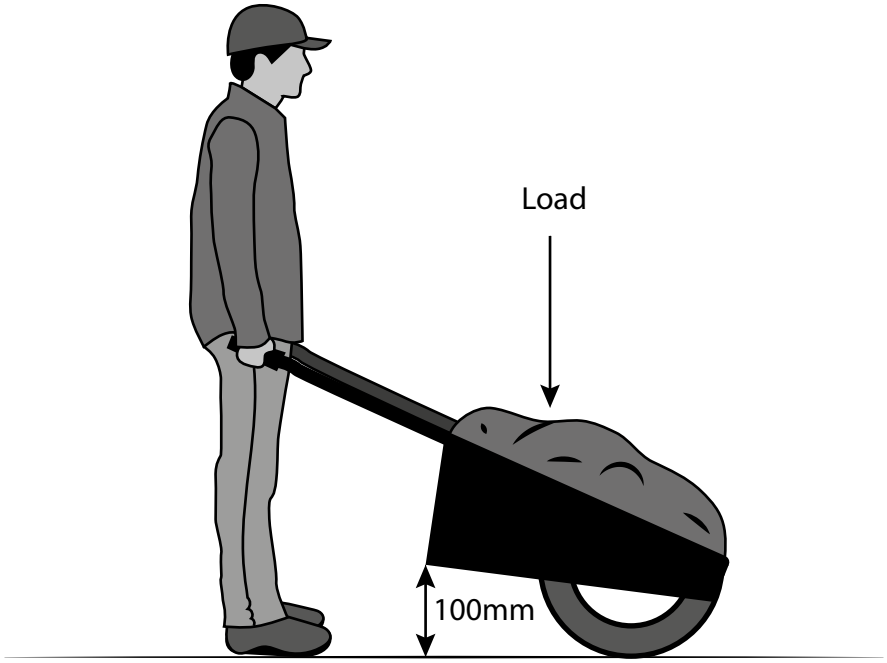

Figure 7

Mechanical advantage (MA) is calculated by:

$$MA = \frac{\text{load}}{\text{effort}}$$

The velocity ratio (VR) is 4 and the effort is 100 N.

The efficiency of the system is given by:

$$\text{Efficiency} = \frac{MA}{VR} \times 100\%$$

The system is 85% efficient.

Calculate the maximum load that can be lifted.

(3)

..... N

(c) Explain **one** reason why the length of the handles on the wheelbarrow would be increased.

(2)

.....

.....

.....

.....

(d) Explain **two** benefits that just-in-time (JIT) manufacturing could have for the manufacturer of the wheelbarrow.

(4)

1 .....

.....

.....

2 .....

.....

.....

(Total for Question 3 = 11 marks)

4 Figure 8 shows a gate.

The gate is moved by an electric motor in combination with a rack and pinion mechanism.

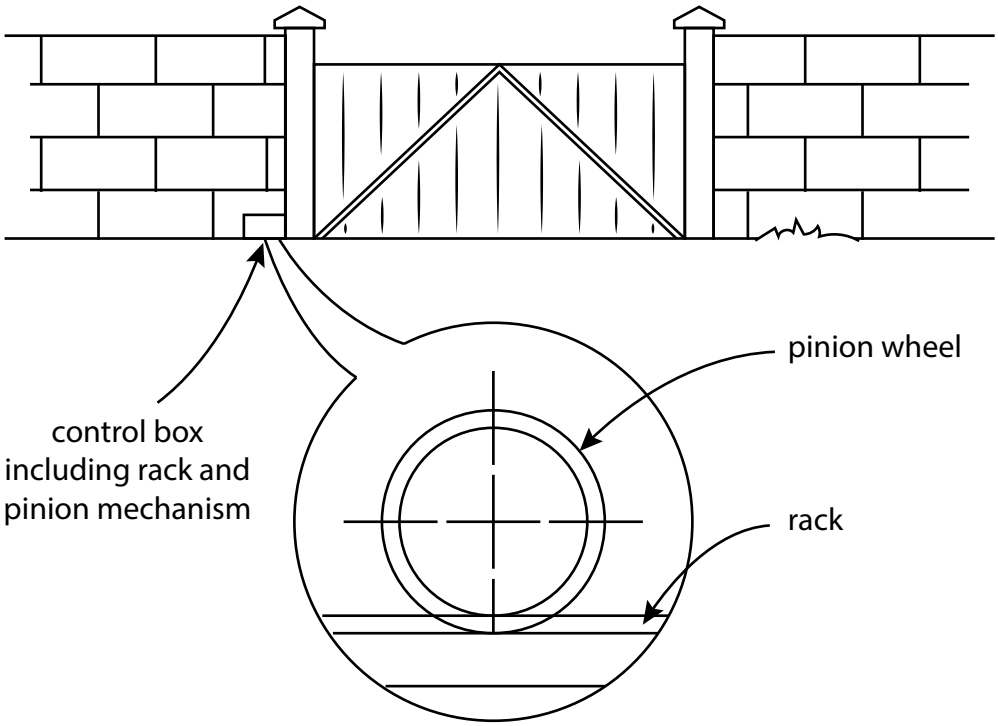

Figure 8

(a) Give **one** other application of a rack and pinion mechanism.

(1)

.....

(b) The gate needs to move 3 m to open fully.

The pinion wheel has a radius of 60 mm.

Calculate the number of revolutions the pinion wheel must rotate in order to open the gate fully.

Give your answer to the nearest whole number.

(4)

Use $\pi = 3.142$

Formula for circumference = πd

.....

(c) Figure 9 shows a graph of the approximate number of people employed in solar-power-related industries between 2012 and 2016.

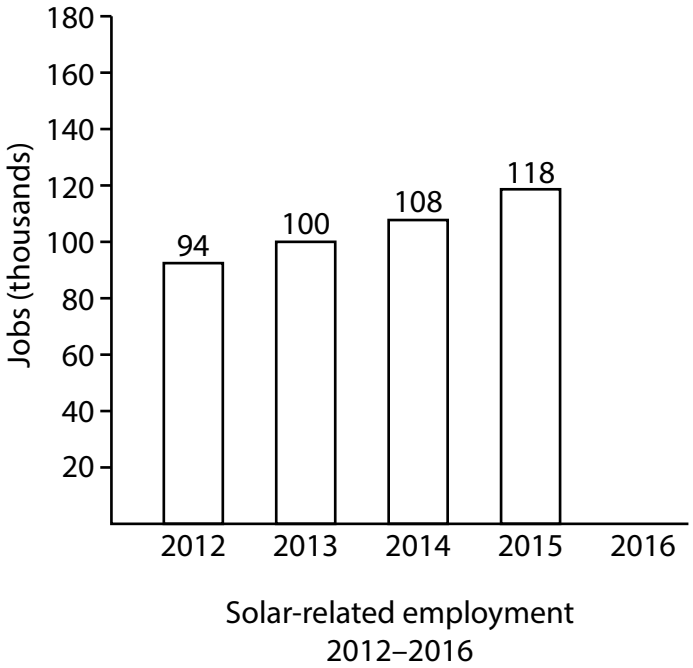

Figure 9

Analyse the graph.

Calculate the expected increase in the number of people employed in solar-power related industries in 2016, based on the current trend.

(1)

increase = ...

(d) The manufacturer considered two different power supplies to power the electric gates.

Figure 10 shows data for these power supplies.

Factor	Solar	Mains electricity
Storage method	Battery	None required on National Grid
Upfront costs	£6000	Nil
Cost per kwh	Nil	9.596 pence
Annual standing charge	Nil	£116

Figure 10

Analyse the data provided.

Discuss the issues that the manufacturer would need to consider when making the decision about which power supply to choose.

(6)

.....

.....

.....

.....

.....

.....

.....

.....

.....

.....

.....

.....

(Total for Question 4 = 12 marks)

TOTAL FOR SECTION A = 40 MARKS

SECTION B – TIMBERS

Answer ALL questions. Write your answers in the spaces provided.

5 Figure 11 shows a design solution and some additional information for a desk tidy.

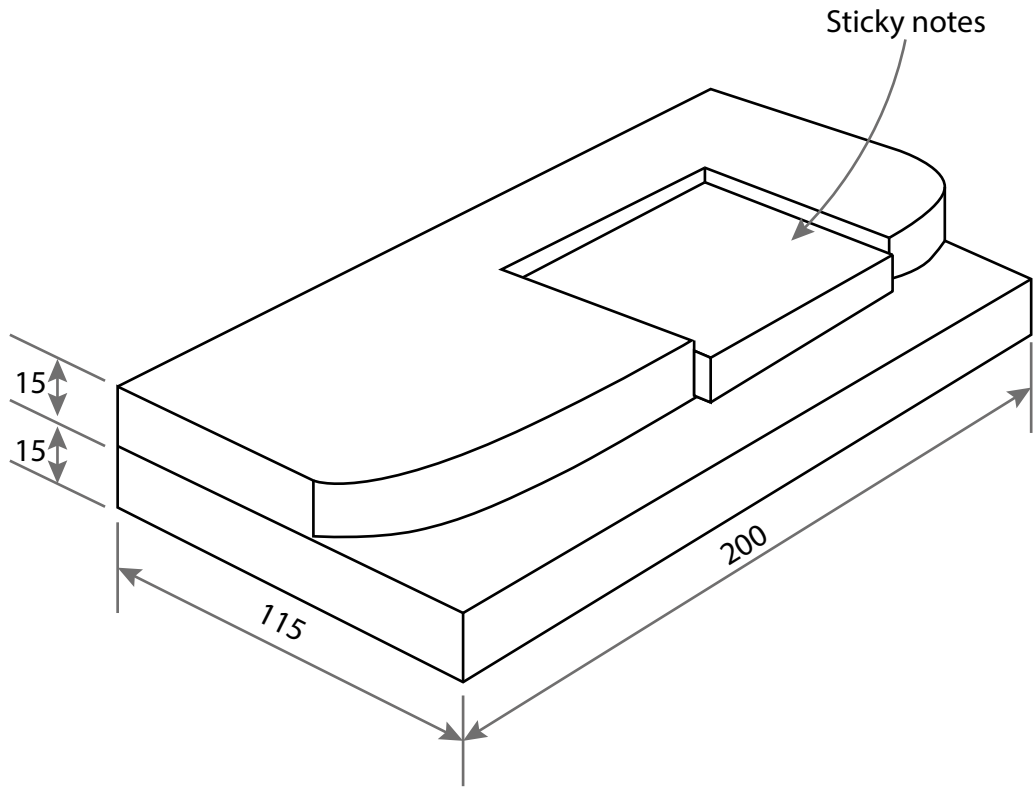

Additional information

Dimensions for 40 business cards

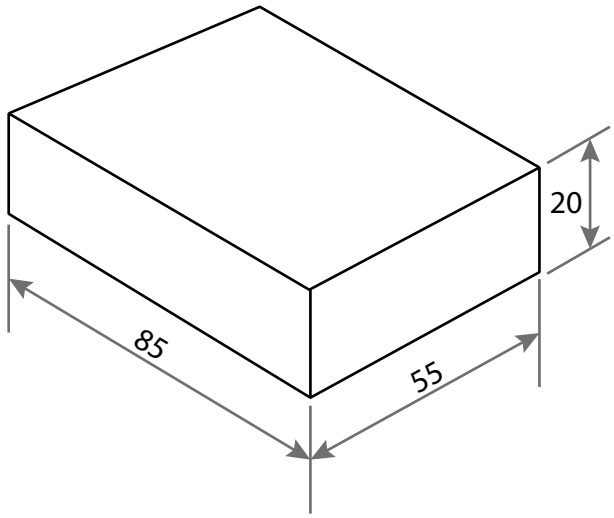

Dimensions of pencil

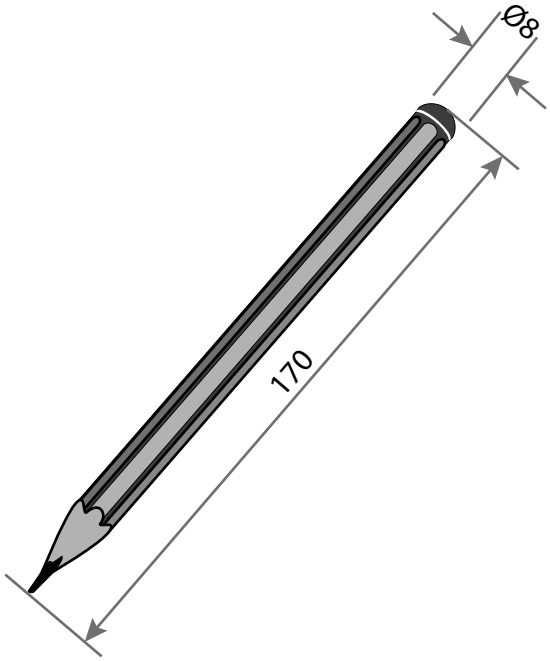

All dimensions in mm. Ø = diameter.

Figure 11

(a) The desk tidy needs to be improved to include the following specification points.

The desk tidy must:

- provide a space for 40 business cards that allows each card to be easily removed
- hold a pencil securely
- have a stable base that does not damage the desk surface.

Use notes and/or sketches to show how the desk tidy could be modified to include these three specification points.

You will be marked on how you apply your understanding of design and technology, not your graphical skills.

Use the outline of the original design solution to show your modifications.

(6)

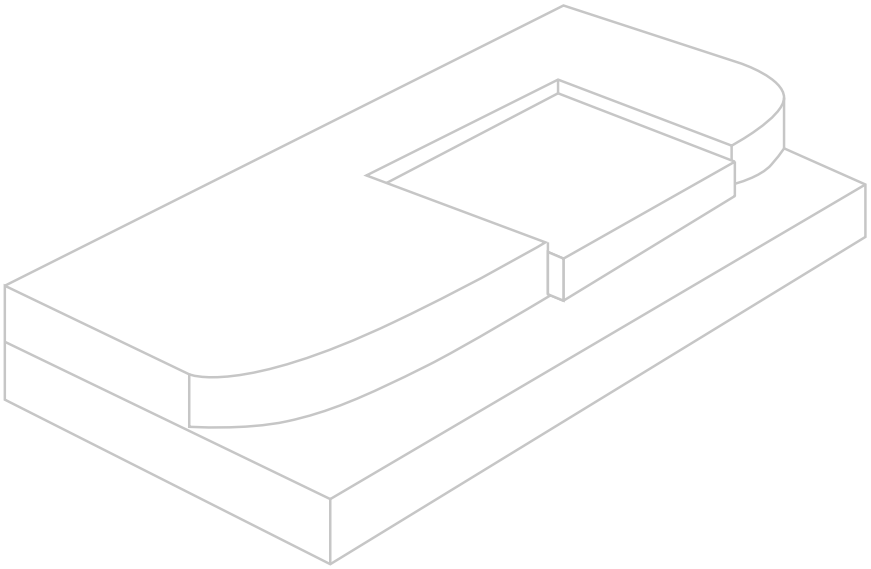

(b) Figure 12 shows a stand for a handheld electronic tablet.

The stand must hold the tablet in different positions.

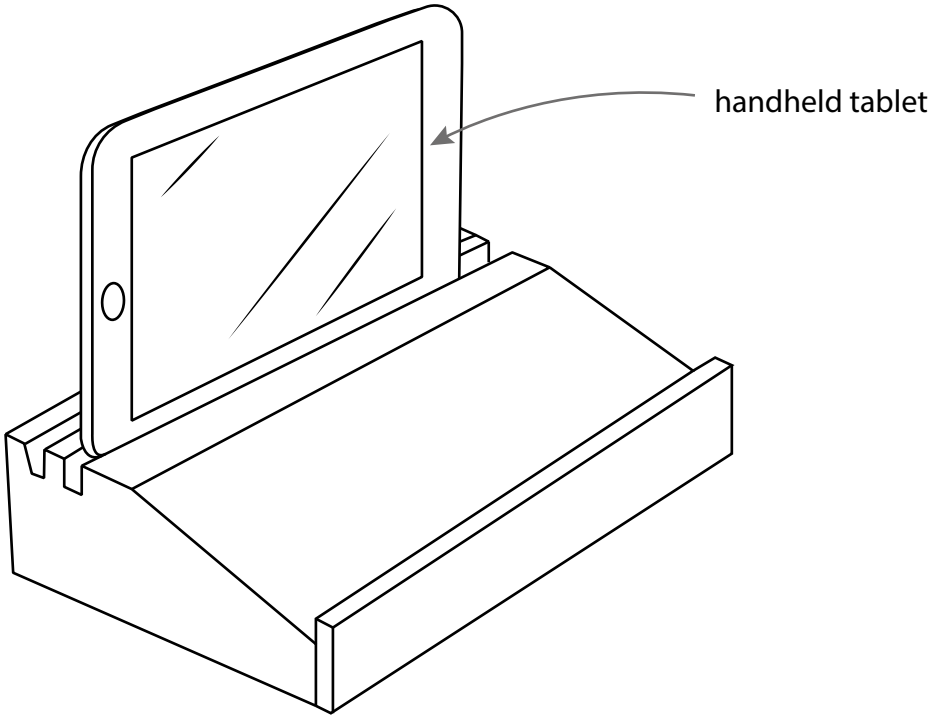

Figure 12

Analyse the stand.

Explain **two** ways in which the stand meets or fails to meet the criteria of holding the tablet in different positions.

(4)

1 .....

.....

.....

.....

2 .....

.....

.....

.....

(Total for Question 5 = 10 marks)

6 Figure 13 shows a child's swing.

The swing is made as a one-off prototype.

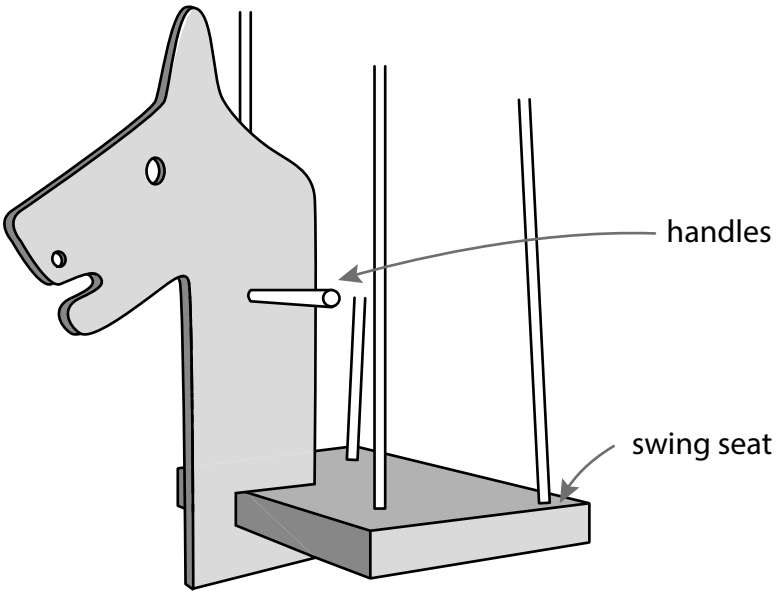

Figure 13

(a) (i) Explain **one** reason why a coping saw was used in the manufacture of the swing.

(2)

.....

.....

.....

.....

(ii) Explain **one** reason why a flat bit was used in the manufacture of the swing.

(2)

.....

.....

.....

.....

(b) Figure 14 shows a shaped handle.

The handles are turned on a lathe.

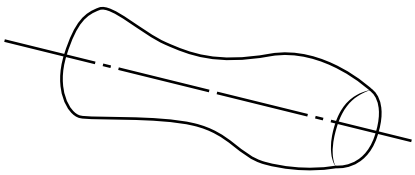

Figure 14

Use notes and/or sketches to show the process of preparing the wood ready to turn on the lathe.

You will be marked on how you apply your understanding of design and technology, not your graphical skills.

(4)

(c) Explain **one** reason why the handles are shaped.

(2)

.....

.....

.....

.....

(d) The swing is going to be mass produced from 25 mm plywood.

Figure 15 shows the head of the swing.

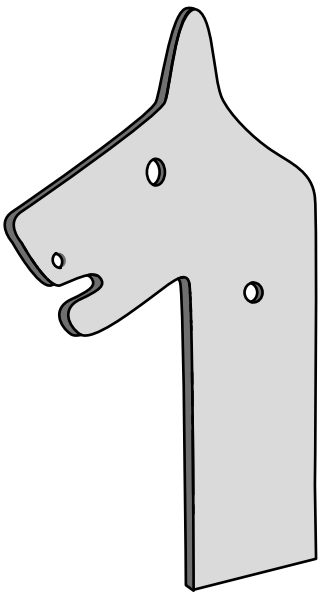

Figure 15

Name **two** methods that can be used to mass produce the head of the swing.

For each method, explain one advantage to the manufacturer of using this method.

(6)

Method 1

.....

Explanation

.....

.....

.....

Method 2

.....

Explanation

.....

.....

.....

(Total for Question 6 = 16 marks)

7 Figure 16 shows a bird table.

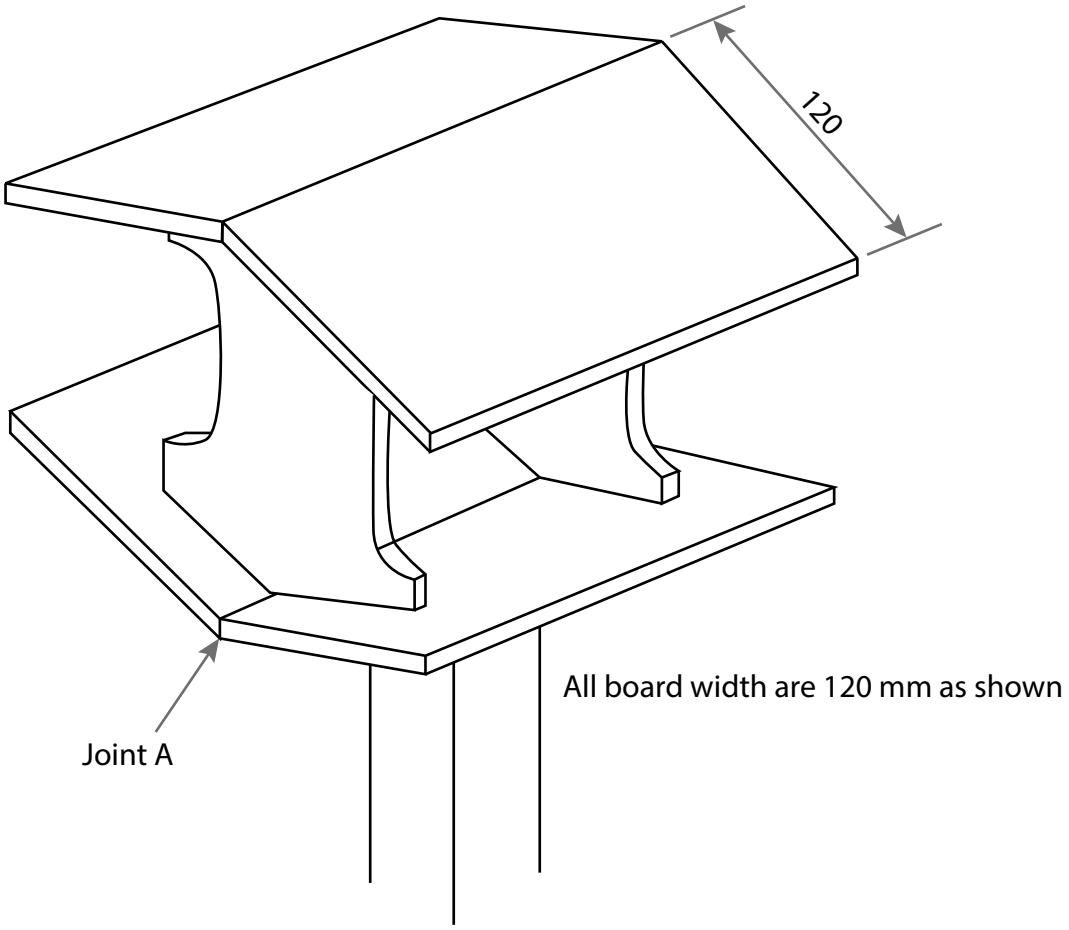

Figure 16

(a) Joint A is a mitre joint.

Give **one** method of increasing the strength of a mitre joint.

(1)

.....

(b) The bird table is manufactured using standard 125 mm wide pine boards.

Explain **two** reasons for using 125 mm wide pine boards rather than 25 mm wide strips.

(4)

1 .....

.....

.....

.....

2 .....

.....

.....

.....

(c) Figure 17 shows the dimensions for the end panel of the bird table.

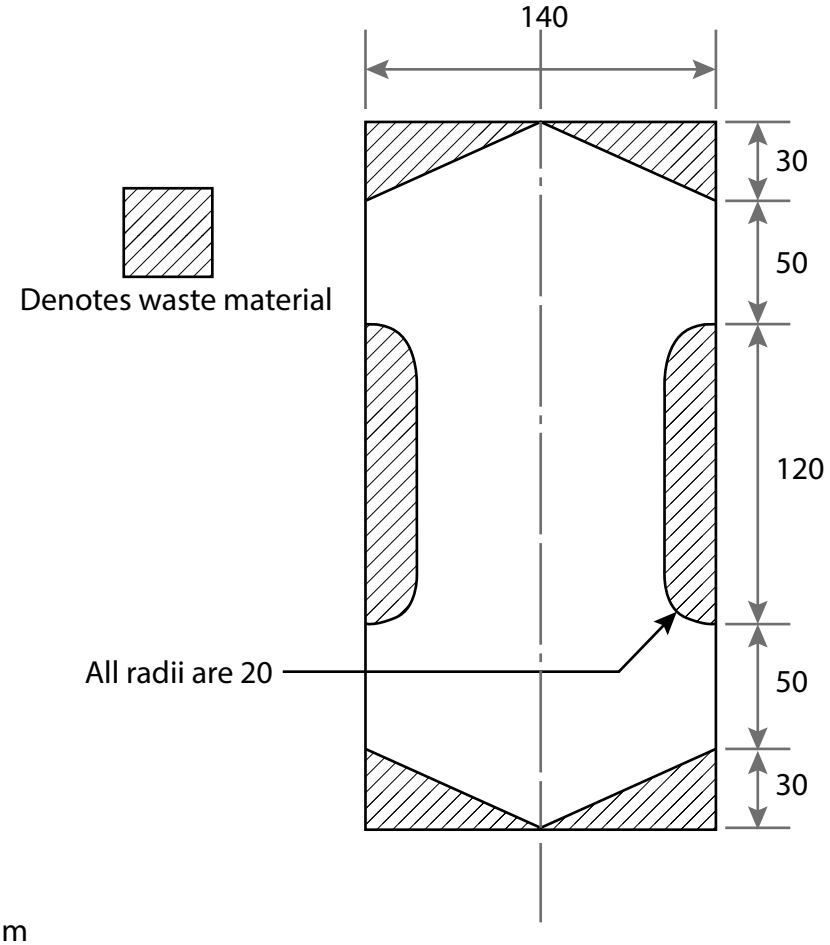

All dimensions in mm

Figure 17

Calculate how much wood is wasted from the whole piece, in cm^2.

Give your answer to 2 decimal places.

Area of a circle = $\pi \times r^2$

Area of a triangle = ½ × base × height

Use $\pi = 3.142$

(5)

cm^2 .....

(d) Explain **two** reasons why pine is an appropriate choice of material for the bird table.

(6)

1 .....

.....

.....

.....

.....

.....

2 .....

.....

.....

.....

.....

(Total for Question 7 = 16 marks)

8 Figure 18 shows a coffee table.

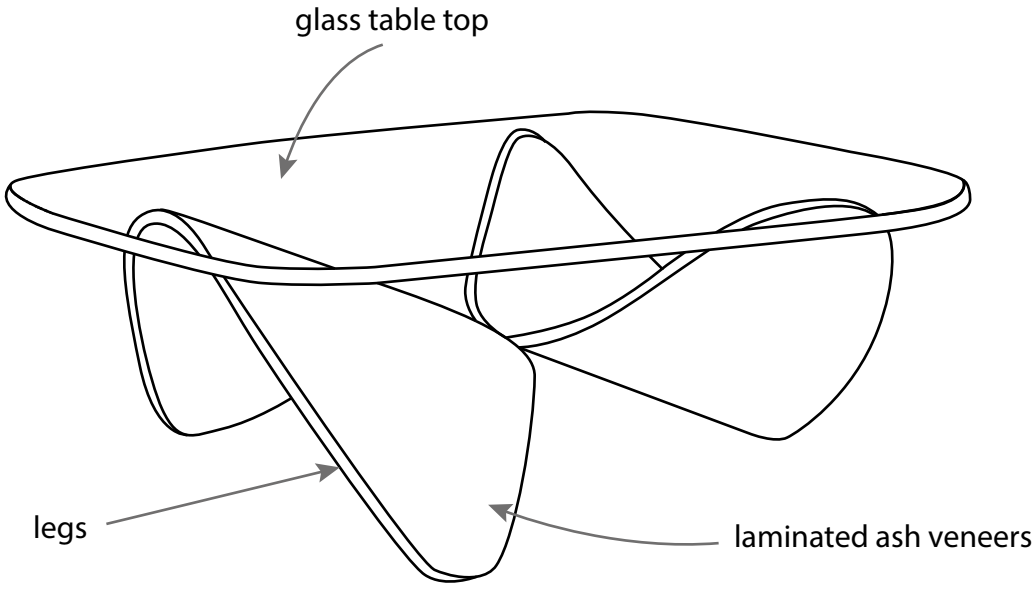

Figure 18

The legs of the coffee table are manufactured from laminated ash veneers.

(a) (i) Explain **one** reason why a layer of varnish was applied to the laminated ash veneers.

(2)

.....

.....

.....

.....

(ii) Explain **one** working property of ash that makes it suitable for the laminated legs.

(3)

.....

.....

.....

.....

.....

(b) Figure 19 shows how the two legs of the coffee table are joined.

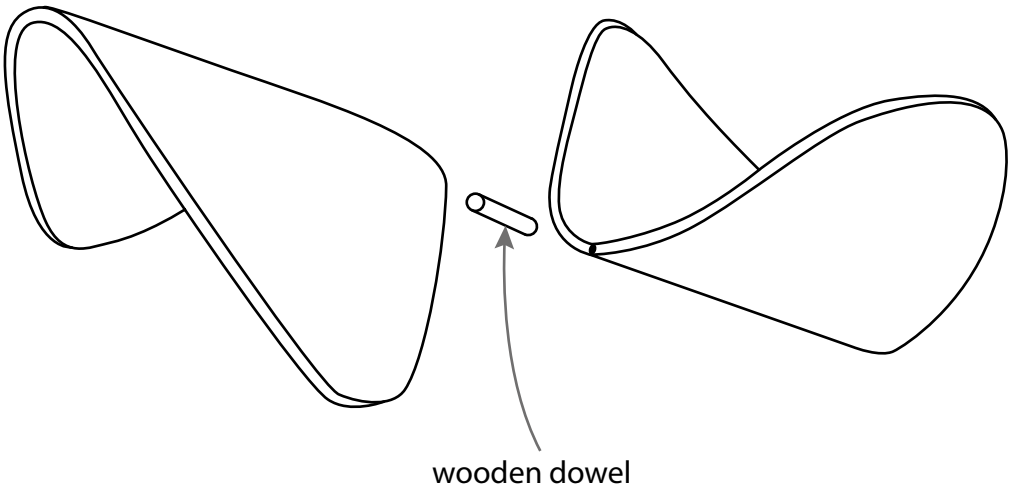

Figure 19

The two legs are identical and laminated on the same former.

They are joined by a wooden dowel.

Explain **two** quality-control checks that would be carried out on the legs during the manufacturing process.

(4)

1 .....

.....

.....

.....

2 .....

.....

.....

.....

(c) The coffee table is manufactured in the UK.

Figure 20 shows information about the coffee table.

Raw material	Ash
Material source	North America and Europe
Disease resistance	Poor and suffers from ash dieback
Lifespan/growth rate	30–300 years

Figure 20

Analyse the information in Figure 20.

Evaluate the coffee table with reference to its ecological footprint.

(9)

(Total for Question 8 = 18 marks)

TOTAL FOR SECTION B = 60 MARKS
TOTAL FOR PAPER = 100 MARKS

Component 1 mark scheme – 1DT0/1F

Section A – Core content

Question number	Answer	Mark
1(a)(i)	Any **one** property from: • lightweight (1) • soft (1) • low density (1).	**(1)**

Question number	Answer	Mark
1(a)(ii)	Any **one** property from: • ductile (1) • malleable (1) • non-corrosive/will not rust (1) • non-reactive with paint (1).	**(1)**

Question number	Answer	Mark
1(a)(iii)	Any **one** property from: • waterproof (1) • plasticity (1) • electrical insulator (1).	**(1)**

Question number	Answer	Mark
1(a)(iv)	Any **one** property from: • lightweight (1) • soft (1) • good water resistance/hydrophobic (1) • good insulator of heat (1)	**(1)**

Question number	Answer	Additional guidance	Mark
1(b)	Any **one** explanation that includes a method of use (1) and a linked justification of that use (1). • The temperature-responsive polymers could give an indication of when it is safe to drink (1) as they will change colour when hot/cool (1). • The temperature-responsive polymers can be used as an aesthetic feature (1), as any logos/images will change colour when hot/cool (1).	Do not award a single mark for simply saying 'they could be used'.	**(2)**

Question number	Answer	Mark
1(c)	**Marks will be awarded for understanding of design and technology, not graphical skills.** Notes and/or sketches that include: • flat linerboard/outer/inner surface (1) • fluted corrugated sheet (1). Example of candidate response: 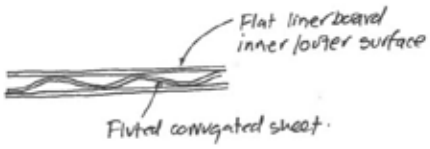	**(2)**

Question number	Answer	Mark
2(a)	Any **one** explanation that includes a benefit (1) and a linked justification of that benefit (1). • MDF is made from waste material (1), therefore the waste will not need to go to landfill/be dumped (1). • Using MDF will reduce the amount of natural timber being consumed/cut down (1), therefore pine as a natural resource will last longer/be put to better use (1).	**(2)**

Question number	Answer	Additional guidance	Mark
2(b)	A calculation that includes: • conversion of units (1) • correct number of whole pieces by dimension (1) • correct sum (1). 300 mm = 30 cm (1) $\frac{61}{30}$ = 2 whole cuts $\frac{122}{30}$ = 4 whole cuts (1) 2 × 4 = 8 whole cuts (1)	Award full marks for correct numerical answer without working. Allow ecf if candidate gets part of calculation wrong.	**(3)**

Question number	Answer	Mark
2(c)	Any **one** explanation that includes an advantage (1) and a linked justification of that advantage (1). • Blended fibres combine the properties of the original fibres (1), therefore the properties can be improved/enhanced (1). • Combing/blending fibres allows cheaper fibres to be incorporated (1), therefore the overall cost of the fabric will be reduced (1). • The appearance/performance of the fabric can be improved/enhanced (1), therefore it is more attractive/appealing to the end user (1). Do not accept cheap on its own, unless qualified.	**(2)**

Question number	Answer	Mark
2(d)	Any **one** explanation that includes a benefit (1) and a linked justification of that benefit (1). • They will/may not be able to make the clock mechanism themselves (1), therefore they do not need to invest in specialist machinery/training/workforce (1). • They will be made by a specialist (1), therefore they will come with a guarantee/ensure quality (1).	**(2)**

Question number	Answer	Mark
3(a)(i)	Type 3	**(1)**

Question number	Answer	Mark
3(a)(ii)	Type 2	**(1)**

Question number	Answer	Additional guidance	Mark
3(b)	A calculation that includes: • transposition of formula and calculation to show MA ÷ VR = 0.85 (1) • transposition of formula to show MA = 3.4 (1) • transposition of MA formula and calculation of load = 340 N (1). $\text{Efficiency} = \frac{MA}{VR} \times 100\%$ $\frac{MA}{VR} = 0.85$ (1) VR × 0.85 = MA VR = 4 MA = 4 × 0.85 = 3.4 (1) Effort = 100 $MA = \frac{\text{load}}{\text{effort}}$ $3.4 = \frac{\text{load}}{100}$ load = 100 × 3.4 = 340 N (1)	Award full marks for correct numerical answer without working. Allow ecf if candidate gets part of calculation wrong.	**(3)**

Question number	Answer	Mark
3(c)	Any **one** explanation that includes a benefit (1) and a linked justification of that benefit (1). • This will increase the mechanical advantage (1), therefore making it easier to lift the wheelbarrow (1). • A greater load/weight can be lifted (1) because there is greater leverage (1).	**(2)**

Question number	Answer	Mark
3(d)	Any **two** explanations that include a benefit (1) and a linked justification of that benefit (1). • They will have much less material in stock (1), therefore they have less money tied up/invested in materials they are not using (1). • They do not have to employ staff on permanent contracts (1), therefore they can employ staff as and when required, reducing the wage bill (1). • Once the wheelbarrows have been manufactured they are shipped out (1), therefore no expensive storage/warehouse required.	**(4)**

Question number	Answer	Mark
4(a)	Any **one** application from: • steering mechanism (1) • slush/lock gate (1) • pillar drilling machine (1) • lathe bed/saddle slide (1).	**(1)**

Question number	Answer	Additional guidance	Mark
4(b)	A calculation that includes: • calculation of circumference (1) • conversion of units: 3 m to 3000 mm (1) • correct sum = 7.96 (1) • 8 whole turns (1). $C = \pi d$ = 3.142 × 120 = 377.04 mm (1) 3 m = 3000 mm (1) $\frac{3000}{377.04} = 7.96$ (1) = 8 whole turns (1)	Award full marks for correct numerical answer without working. Allow ecf if candidate gets part of calculation wrong.	**(4)**

Question number	Answer	Mark
4(c)	12/12 thousand/12 000	**(1)**

Question number	Indicative content	Mark
4(d)	**AO3 (6 marks)** • Solar power is expensive to set up. • Solar power is free once installed. • Limited by sunlight hours. • Batteries lose ability to charge/recharge over time. • Mains power incurs a flat fee every year even if you do not use it. • Every time you open/close the gates it will cost you money if using mains power. • Power lines can be blown down in the wind, which means you cannot operate the gate in a power cut, therefore you may be shut in/out of your house. • Installing power lines is very expensive in remote areas, which means it might be prohibitively expensive to install them, therefore making solar power a more viable option. • If the solar exposure is low the batteries might not charge up enough, which means there might not be sufficient power to open/close the gates. • The standing charge is a flat fee that has to be paid, which means if you are away for a long period of time and do not use the gates, you still have to pay the charge, which will be a waste of money.	**(6)**

Level	Mark	Descriptor
	0	No rewardable material.
Level 1	1–2	• Attempts to interrogate and deconstruct information but connections and logical chains of reasoning are flawed. • An unbalanced appraisal of the information/issues, containing judgements that show a limited awareness of the interrelationships between factors or competing arguments.
Level 2	3–4	• Interrogates and deconstructs information and provides some connections and logical chains of reasoning. • A balanced appraisal of the information/issues, containing judgements that show an awareness of the interrelationships between factors or competing arguments.
Level 3	5–6	• Interrogates and deconstructs information and provides sustained connections and logical chains of reasoning. • A well-balanced appraisal of the information/issues, containing judgements that show a thorough awareness of the interrelationships between factors or competing arguments.

Section B – Timbers

Question number	Answer	Mark
5(a)	**Marks will be awarded for understanding of design and technology, not graphical skills.** Notes and/or sketches that include: • a space for 40 business cards (1) that allows them to be easily removed (1), e.g. use of dimensions to show sizes /slots/recess/drawers/ability to remove cards with finger slots/space • holding a pencil (1) securely (1), e.g. holes of an appropriate size/slots/tray/deep enough/method and justification • a stable base (1) that does not damage the desk surface (1), e.g. small feet/turned pegs. Example of candidate response: 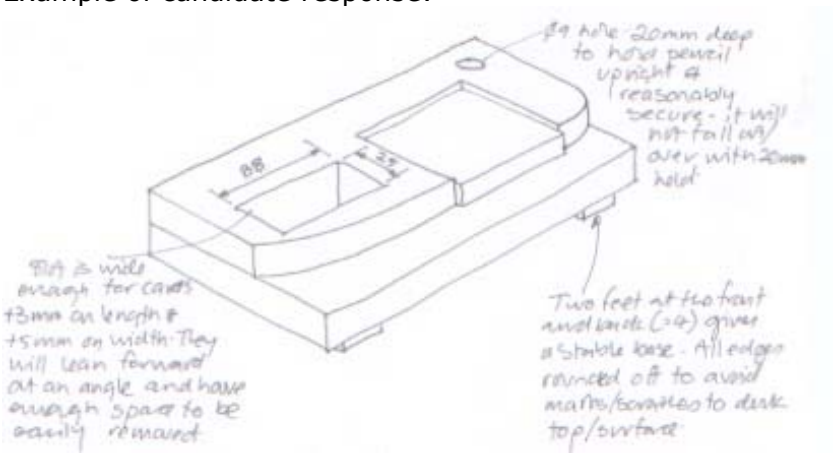 Annotated notes: Ø9 hole 20 mm deep to hold pencil upright – reasonably secure – it will not fall out/over with 20 mm hole. Two feet at the front and back (= 4) gives a stable base. All edges rounded off to avoid marks/scratches on desk top/surface. Slot is wide enough for cards +3 mm on length and +5 mm on width. They will lean forward at an angle and have enough space to be easily removed. Measurements shown: 88, 29.	(6)

Question number	Answer	Mark
5(a) continued	Example of candidate response: 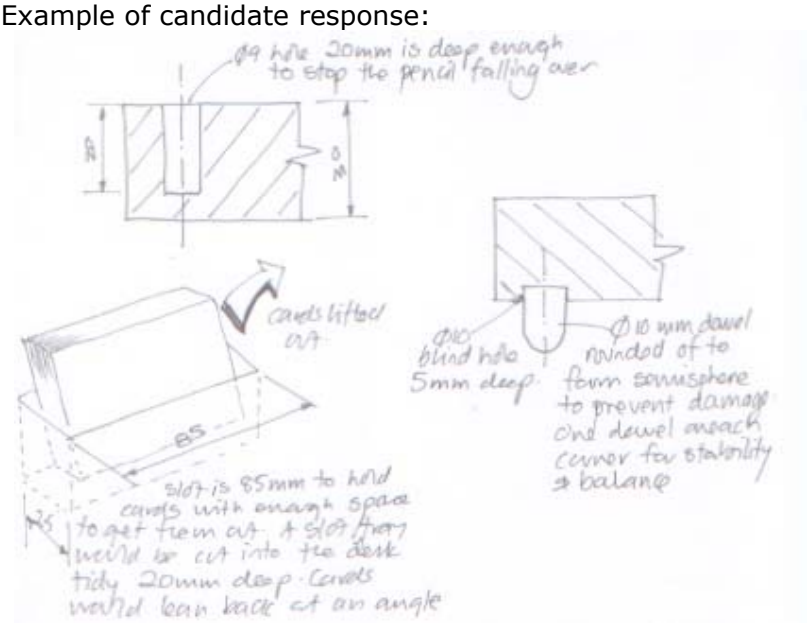 Annotated notes: Ø9 hole 2 mm is deep enough to stop the pencil falling over, measurements shown: 20, 30. Cards lifted out. Slot is 85 mm to hold cards with enough space to get them out. A slot tray would be cut into the desk tidy 20 mm deep. Cards would lean back at an angle. Ø10 blind hole 5 mm deep. Ø10 dowel rounded off to form semisphere to prevent damage. One dowel on each corner for stability and balance.	

Question number	Answer	Mark
5(b)	Any **two** explanations that includes a way (1) and a linked justification of that way (1). • There are two different types/shapes of slot at the back of the stand (1), which successfully meets the design criterion as the tablet can be held either vertically upright or leaning back at a slight angle, providing a choice for the user (1). • There is a slope at the front which allows the tablet to be laid down (1), this meets the design criterion as it allows the tablet to be held, and therefore viewed, at an angle (1).	**(4)**

Question number	Answer	Mark
6(a)(i)	Any **one** explanation that includes a reason (1) and a linked justification of that reason (1). • The shape of the swing has curves that can be cut with a coping saw (1) because the blade is thin and can be rotated (1). • The hole for the eyes is in the middle of the wood and can be cut with a coping saw (1) because the blade of the coping can be removed and passed through a small hole (1).	**(2)**

Question number	Answer	Mark
6(a)(ii)	Any **one** explanation that includes a reason (1) and a linked justification of that reason (1). • The large hole for the eye cannot be drilled with a normal twist drill/parallel shank (normally 12 mm max) (1), therefore a flat bit that has a normal shank must be used (1). • The seat has a blind hole (1), which can be achieved because the flat bit is shaped that way/depth controlled with a depth stop (1).	**(2)**

Question number	Answer	Additional guidance	Mark
6(b)	**Marks will be awarded for understanding of design and technology, not graphical skills.** Notes and/or sketches that include: • marking out centre and waste (1) • making a saw cut across one end (1) • plane off corners (1) • mount on the lathe between centres (1). Examples of candidate response: 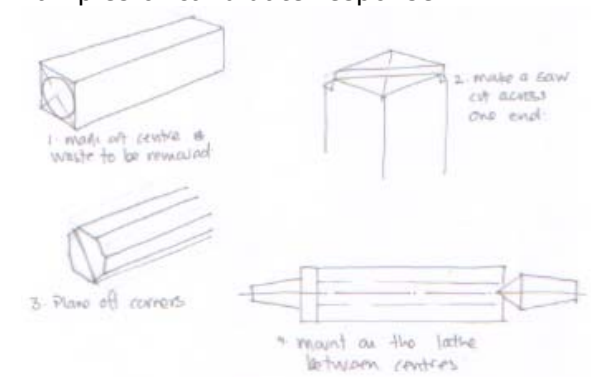 Annotated notes: 1 Mark out centre and waste to be removed. 2 Make a saw cut across one end. 3 Plane off corners. 4 Mount on the lathe between centres. 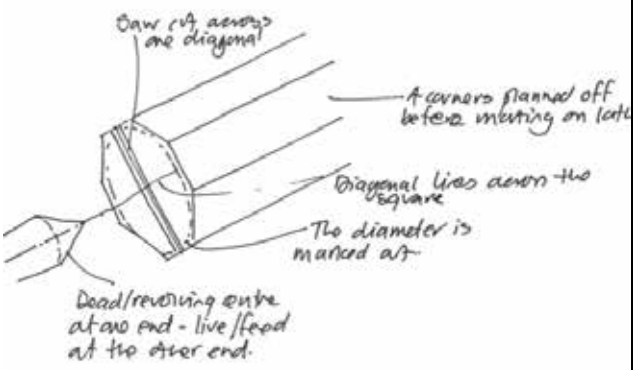 Annotated notes: saw cut across one diagonal. 4 corners planed off before mounting on lathe. Diagonal lines across the square. The diameter is marked out. Dead/revolving centre at one end – live/feed at the other end.	Do not accept anything related to preparation for turning on a faceplate.	**(4)**

Question number	Answer	Mark
6(c)	Any **one** explanation that includes a reason (1) and a linked justification of that reason (1). • They are rounded more/have fewer sharp/square edges (1), therefore they are less likely to cause an injury to the user (1). • They are more ergonomically shaped (1) therefore they will be more comfortable for the user to grip/hold (1).	**(2)**

Question number	Answer	Mark
6(d)	Any **two** explanations that include a method (1), plus **two** linked justifications of that method (1) + (1). • A CNC router (1), which is computer operated so requires minimal human intervention (1), therefore reducing errors (1). • A jig/template can be used (1), which means that shapes can be repeated (1), therefore identical copies are produced (1).	**(6)**

Question number	Answer	Additional guidance	Mark
7(a)	Any **one** method from: • adding/inserting dowels (1) • adding of biscuits (1) • inserting screws (1) • inserting nails (1) • adding a strip down the middle to increase gluing area (1).	Do not accept cutting any joints, such as finger /comb joints, as a means to increasing the contact area.	**(1)**

Question number	Answer	Mark
7(b)	Any **two** explanations that include a reason (1) and a linked justification of that reason (1). • The 125 mm boards will need one cut to reduce them to size (1), therefore it is quicker than joining several strips together (1). • One 125 mm board will have greater dimensional stability than lots of smaller strips joined together (1), therefore it is less likely to twist or warp (1). • Gluing strips together is a complex task (1), therefore it could result in uneven joints (1). • There is a risk that the glued joint can come undone (1), therefore gaps could appear/lead to leaking on to the table (1).	**(4)**

Question number	Answer	Additional guidance	Mark
7(c)	A calculation that includes: • conversion of units from mm to cm before further calculations • calculation of total area = 392 cm^2 (1) • calculation of area used: area of the rectangles = 32 cm^2 (1) area of triangles = 48 cm^2 (1) area equivalent to 1 full circle = 12.568 cm^2 (1) • total area wasted given to 2 d.p.: total area – total area used = 299.43 cm^2 (1).	Do not award the final mark if the answer is still in mm^2. Award full marks for correct numerical answer without working. Allow ecf if candidate gets part of calculation wrong.	**(5)**

Question number	Answer	Mark
7(d)	Any **two** explanations that include a reason (1), plus **two** linked justifications of that reason (1) + (1). • Pine is a resinous material (1), which means it is quite good at repelling/resisting water (1), therefore it will withstand the weather elements when left outside (1). • Pine is quite a tough/hard material (1), which means it can withstand knocks/bumps/birds pecking at it (1), therefore it can last a long time (1). • Pine will mellow/change colour when left outside (1), which means it will darken (1), therefore blending into the environment better/not stand out as much (1).	**(6)**

Question number	Answer	Mark
8(a)(i)	Any **one** explanation that includes an advantage (1) and a linked justification of that advantage (1). • The varnish will enhance the ash grain/make it look nicer (1), therefore improve sales/attract greater interest/ improve aesthetics (1). • The varnish will make the legs/timber more durable (1), therefore make it last longer (1). • The surface will be shiny/more resistant to moisture/smoother (1), which would make it easier to dust/polish/keep clean (1).	**(2)**

Question number	Answer	Mark
8(a)(ii)	Any **one** explanation that includes a working property (1), plus **two** linked justifications of that working property (1) + (1). • Ash is a flexible timber (1), which means it can bend/flex without snapping/tearing/ripping (1), meaning it is suitable to be bent around a former (1). • Ash is tough (1), which means it can withstand the knocks and bumps of everyday use (1) and so will not dent/bruise, resulting in a poor visual appearance (1). • Is has elasticity (1) but once glued it will retain the shape it has been formed into (1), resulting in a stiff/rigid shape (1).	**(3)**

Question number	Answer	Mark
8(b)	Any **two** explanations that include a quality-control check (1) and a linked justification of that quality-control check (1). • The shape of the legs is correct (1), so that when they are joined together they are at the right height/angle (1). • The position/drilling of the hole for the dowels (1), so that when they are joined together they fit accurately (1). • The correct number of veneers are used/the thickness is correct (1), to ensure that the legs will be stiff enough to take the weight/loads they will be subjected to (1).	**(4)**

Question number	Indicative content	Mark
8(c)	**AO3 (9 marks)** • The timber needs to be transported to the UK for manufacture. • It can take a very long time for the trees to reach a stage of maturity before they can be cut down/felled. • They suffer from disease that could put them at risk of extinction. • The table uses veneers rather than solid wood. • North America/Europe are far away and therefore it will take time/energy to get the material to the UK/cause pollution. • Timber is a renewable source but takes a long time to grow and therefore demand might not be able to be sustained. • Can be sourced from FSC forests, which means that new supplies would be planted/stock levels maintained. • Uncontrolled logging results in the erosion of landscape, which can damage the landscape beyond repair/renders the land useless.	**(9)**

Level	Mark	Descriptor
	0	No rewardable material.
Level 1	1–3	• Attempts to interrogate and deconstruct information but connections and logical chains of reasoning are flawed. • An unbalanced appraisal of the information/issues, containing judgements that show a limited awareness of the interrelationships between factors or competing arguments. • A conclusion may be presented but it is likely to be generic assertions rather than supported by relevant judgements.
Level 2	4–6	• Interrogates and deconstructs information and provides some connections and logical chains of reasoning. • A balanced appraisal of the information/issues, containing judgements that show an awareness of the interrelationships between factors or competing arguments. • A conclusion is presented that is partially supported by relevant judgements.
Level 3	7–9	• Interrogates and deconstructs information and provides sustained connections and logical chains of reasoning. • A well-balanced appraisal of the information/issues, containing judgements that show a thorough awareness of the interrelationships between factors or competing arguments. • A conclusion is presented that is fully supported by relevant judgements.

Pearson Edexcel Level 1/Level 2 GCSE (9–1)

Design and Technology

Component 2

Sample assessment material for first teaching September 2017
Release date 1st June 2017
Valid for certification in 2018

Paper Reference
1DT0/02

You do not need any other materials.

Instructions to candidates

- You must undertake a project in response to one of the contextual challenges, taking into account the needs and wants of the user.
- You should use creativity and imagination when applying iterative design processes to develop and modify designs, and to design and make a prototype.
- You have been provided with three themes, each with two contextual challenges. You must design and make a prototype in relation to one of the contextual challenges listed. Through your ideas and your final prototype, you will be required to show how you have addressed the contextual challenge.
- You must produce a portfolio and a prototype.
- The portfolio must contain photographic evidence of the manufacture of the prototype.
- Your portfolio must be approximately 20-30 pages (or electronic equivalent).

Turn over

S56116A

1/

S 5 6 1 1 6 A

Pearson

Contextual challenges

All design and technology happens within a context, it is important for designers to understand the context they are designing within, as this will impact on the wants and needs of users as well as the requirements for the design.

Designers often need to find innovative solutions to design challenges and they look for inspiration from many places to come up with ideas. Often, these design challenges relate to ways in which improvements can be made to the lives or environments in which people live.

Below are three themes, each with two contextual challenges. You must choose one contextual challenge to explore and respond to through your assessment project.

Theme 1 Improving living and working

Contextual challenges

(a) How can living spaces also be used for a work environment?

(b) How can objects be used for different purposes in a living or working environment?

Theme 2 The sporting arena

Contextual challenges

(a) How can technology be used to improve a sporting situation?

(b) How can merchandise be used to promote a sporting situation?

Theme 3 Expanding human capacity

Contextual challenges

(a) How can an aid for people with disabilities improve their capacity to perform a given task?

(b) How can we provide more protection for humans from the environment?

edexcel

For information about Edexcel, BTEC or LCCI qualifications
visit qualifications.pearson.com

Pearson Education Limited. Registered in England and Wales No. 872828
Registered Office: 80 Strand, London WC2R 0RL
VAT Reg No GB 278 537121

ISBN 978-1-4469-3300-8