Write your name here

Surname	Other names

Pearson Edexcel
Level 1/Level 2 GCSE (9-1)

Centre Number | Candidate Number

Physics
Paper 1

Higher Tier

Wednesday 23 May 2018 – Afternoon
Time: 1 hour 45 minutes

Paper Reference
1PH0/1H

You must have:
Calculator, ruler

Total Marks

Instructions
- Use **black** ink or ball-point pen.
- **Fill in the boxes** at the top of this page with your name, centre number and candidate number.
- Answer **all** questions.
- Answer the questions in the spaces provided – *there may be more space than you need.*
- Calculators may be used.
- Any diagrams may NOT be accurately drawn, unless otherwise indicated.
- You must **show all your working out** with **your answer clearly identified** at the **end of your solution**.

Information
- The total mark for this paper is 100.
- The marks for **each** question are shown in brackets – *use this as a guide as to how much time to spend on each question.*
- In questions marked with an asterisk (*), marks will be awarded for your ability to structure your answer logically showing how the points that you make are related or follow on from each other where appropriate.
- A list of equations is included at the end of this exam paper.

Advice
- Read each question carefully before you start to answer it.
- Try to answer every question.
- Check your answers if you have time at the end.

Turn over

P60466A
©2018 Pearson Education Ltd.
1/1/1/1/1/1/

P 6 0 4 6 6 A 0 1 3 2

Pearson

Answer ALL questions. Write your answers in the spaces provided.

Some questions must be answered with a cross in a box ☒.
If you change your mind about an answer, put a line through the box ☒ and then mark your new answer with a cross ☒.

1 Sonar is an example of a use of ultrasound.

(a) State **one** other example of a use of ultrasound.

(1)

.....

.....

(b) State an example of a use of infrasound.

(1)

.....

.....

DO NOT WRITE IN THIS AREA
DO NOT WRITE IN THIS AREA
DO NOT WRITE IN THIS AREA
DO NOT WRITE IN THIS AREA
DO NOT WRITE IN THIS AREA
DO NOT WRITE IN THIS AREA

(c) Figure 1 shows the depth of the sea, measured using sonar, at different distances from the shore.

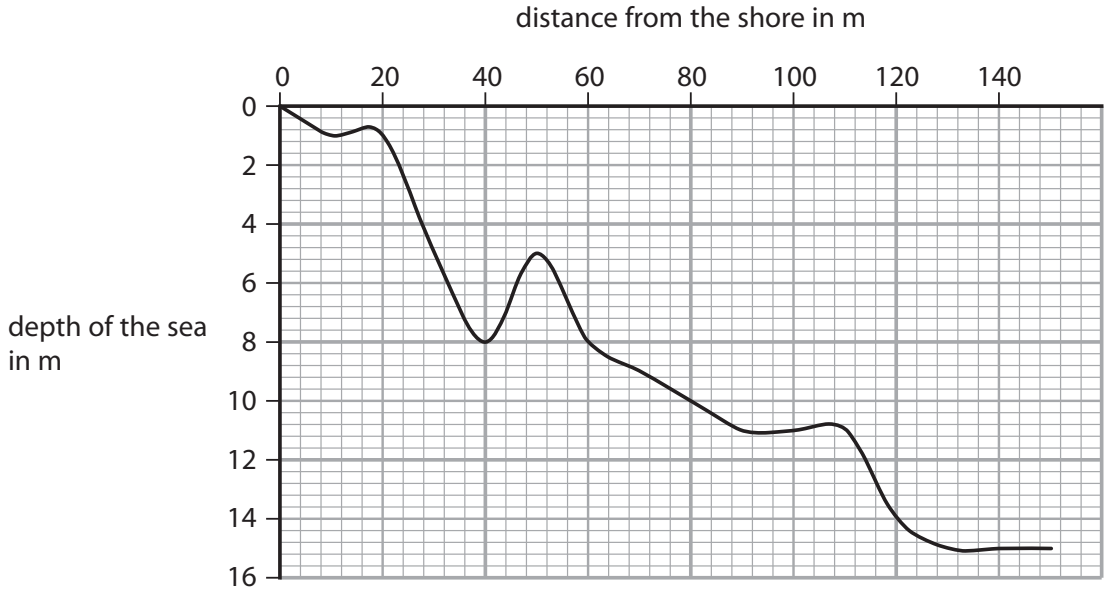

Figure 1

A technician on a boat uses sonar pulses to measure the depth of the sea when the boat is 120 m from the shore.

Calculate the **total** time of travel for the sonar pulse used to make this measurement.

The speed of the sonar pulse in seawater is 1600 m/s.

(4)

time of travel = ... s

(Total for Question 1 = 6 marks)

DO NOT WRITE IN THIS AREA
DO NOT WRITE IN THIS AREA
DO NOT WRITE IN THIS AREA
DO NOT WRITE IN THIS AREA
DO NOT WRITE IN THIS AREA
DO NOT WRITE IN THIS AREA

2 (a) A student investigates what happens when light travels from air to glass.

Figure 2 shows some of the apparatus used in the investigation.

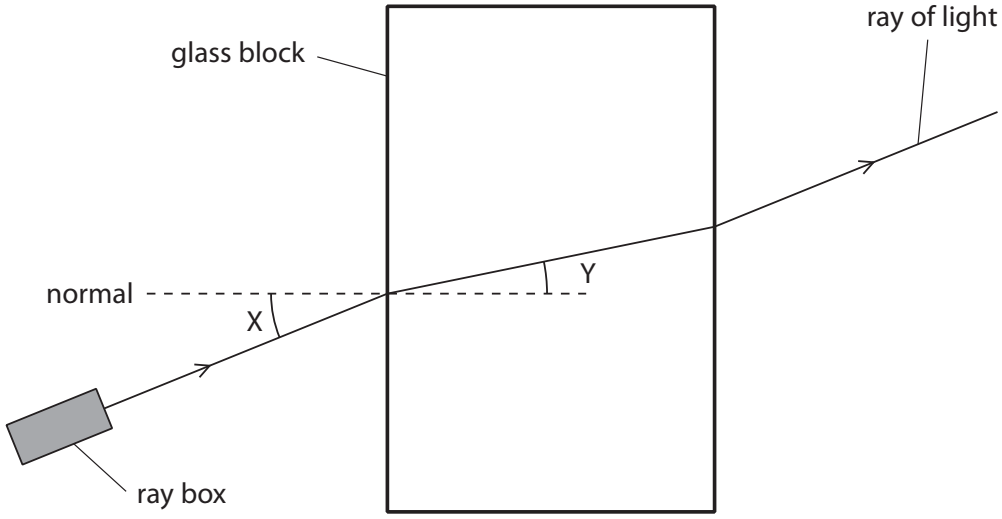

Figure 2

(i) In Figure 2, angle Y is the angle of

(1)

☒ **A** deflection

☒ **B** incidence

☒ **C** reflection

☒ **D** refraction

DO NOT WRITE IN THIS AREA
DO NOT WRITE IN THIS AREA
DO NOT WRITE IN THIS AREA
DO NOT WRITE IN THIS AREA
DO NOT WRITE IN THIS AREA
DO NOT WRITE IN THIS AREA

(ii) Figure 3 is a graph of the student's results.

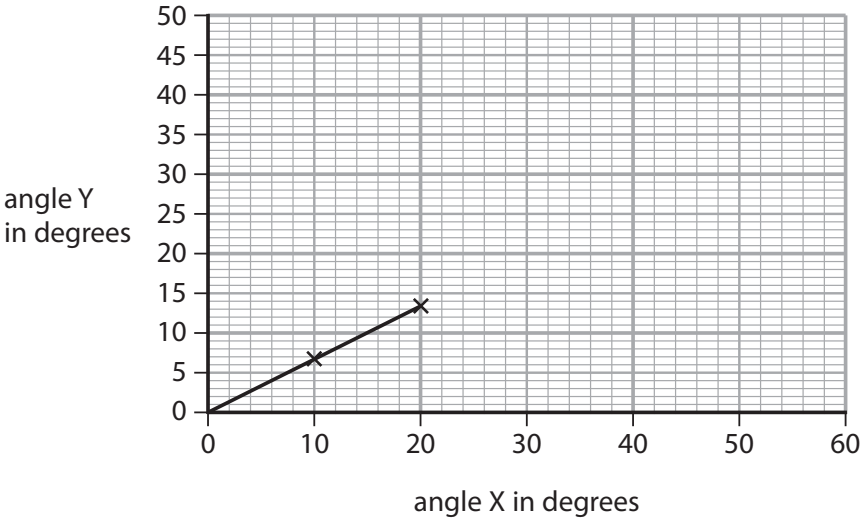

Figure 3

Use the graph to calculate a value for

$$\frac{\text{angle Y}}{\text{angle X}}$$

(2)

$\frac{\text{angle Y}}{\text{angle X}}$ = ...

(iii) The student concludes that angle Y is directly proportional to angle X.

Explain what the student must do to test this conclusion in more detail.

(3)

.....

.....

.....

.....

.....

.....

DO NOT WRITE IN THIS AREA
DO NOT WRITE IN THIS AREA
DO NOT WRITE IN THIS AREA
DO NOT WRITE IN THIS AREA
DO NOT WRITE IN THIS AREA
DO NOT WRITE IN THIS AREA

(b) The speed of light is 3.0×10^8 m/s.

The wavelength of yellow light is 5.8×10^{-7} m.

Calculate the frequency of yellow light.

State the unit.

Use the equation

$$\text{frequency} = \frac{\text{speed}}{\text{wavelength}}$$

(3)

frequency = ... unit .....

(Total for Question 2 = 9 marks)

DO NOT WRITE IN THIS AREA
DO NOT WRITE IN THIS AREA
DO NOT WRITE IN THIS AREA
DO NOT WRITE IN THIS AREA
DO NOT WRITE IN THIS AREA
DO NOT WRITE IN THIS AREA

DO NOT WRITE IN THIS AREA
DO NOT WRITE IN THIS AREA
DO NOT WRITE IN THIS AREA
DO NOT WRITE IN THIS AREA
DO NOT WRITE IN THIS AREA
DO NOT WRITE IN THIS AREA

BLANK PAGE

3 Figure 4 shows a Geiger-Müller (GM) tube used for measuring radioactivity.

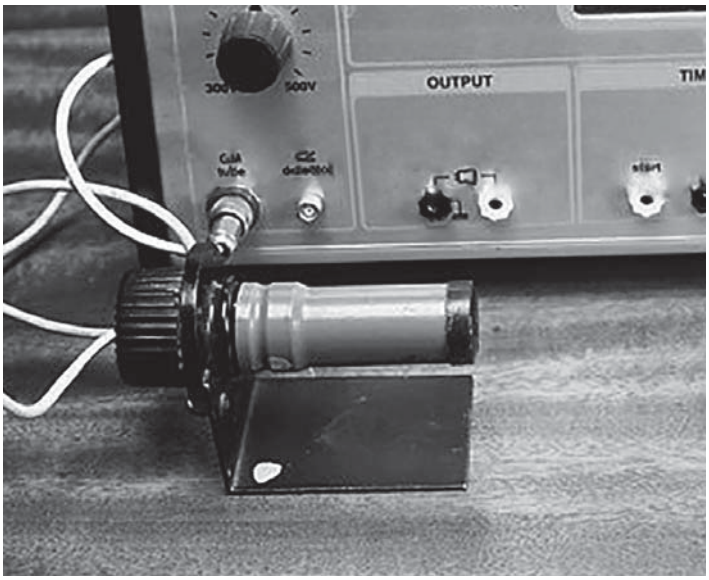

© Andrew Lambert Science Photo Library

Figure 4

(a) Describe how a teacher should use a Geiger-Müller (GM) tube to compare the count-rates from two different radioactive rocks.

(4)

.....

.....

.....

.....

.....

.....

.....

.....

DO NOT WRITE IN THIS AREA
DO NOT WRITE IN THIS AREA
DO NOT WRITE IN THIS AREA
DO NOT WRITE IN THIS AREA
DO NOT WRITE IN THIS AREA
DO NOT WRITE IN THIS AREA

(b) A hospital uses a radioactive isotope with a half-life of 6 hours.

A technician measures a count rate of 80 counts per minute (cpm) from this isotope.

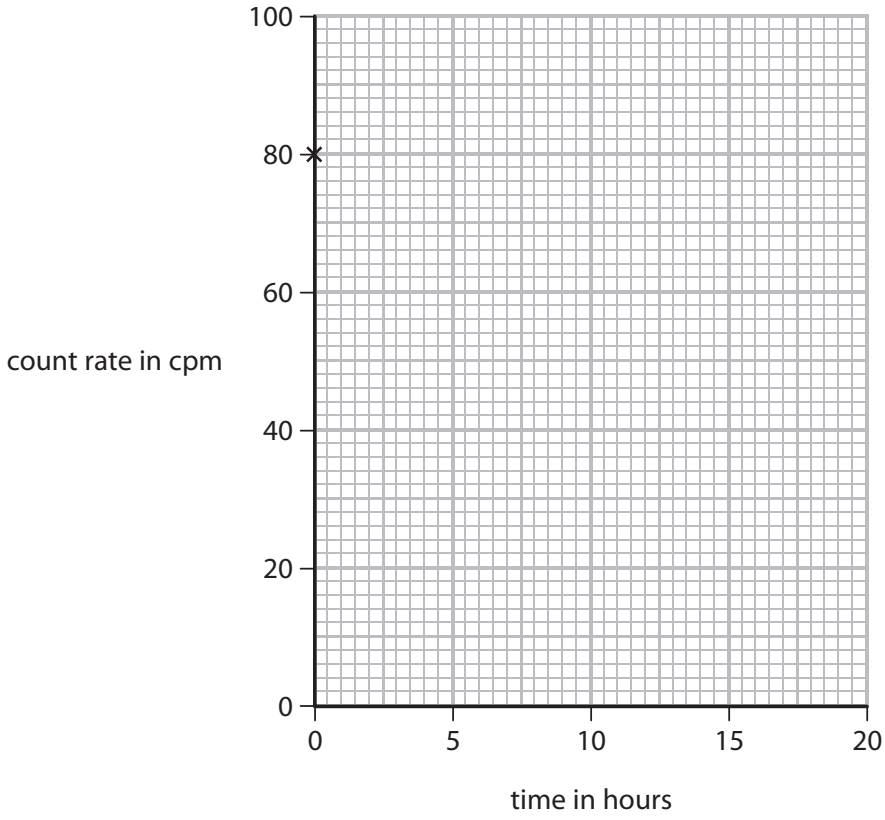

Figure 5

Complete the graph on Figure 5, as accurately as possible, to show how the count-rate from this isotope will change from the time of the first measurement.

The first point is already drawn in Figure 5.

(3)

(c) One radioactive source used in hospitals is technetium (Tc).

Technetium is produced from the radioactive decay of molybdenum (Mo).

Complete the following nuclear equation.

(1)

$$^{99}_{42}\text{Mo} \rightarrow \text{_____}\ \text{Tc} + {}^{0}_{-1}\beta$$

(Total for Question 3 = 8 marks)

DO NOT WRITE IN THIS AREA
DO NOT WRITE IN THIS AREA
DO NOT WRITE IN THIS AREA
DO NOT WRITE IN THIS AREA
DO NOT WRITE IN THIS AREA
DO NOT WRITE IN THIS AREA

BLANK PAGE

DO NOT WRITE IN THIS AREA
DO NOT WRITE IN THIS AREA
DO NOT WRITE IN THIS AREA
DO NOT WRITE IN THIS AREA
DO NOT WRITE IN THIS AREA
DO NOT WRITE IN THIS AREA

4 (a) Which row of the table is correct for both force and velocity?

(1)

	force	velocity
☒ **A**	scalar	scalar
☒ **B**	scalar	vector
☒ **C**	vector	scalar
☒ **D**	vector	vector

(b) Figure 6 shows a satellite orbiting the Earth.

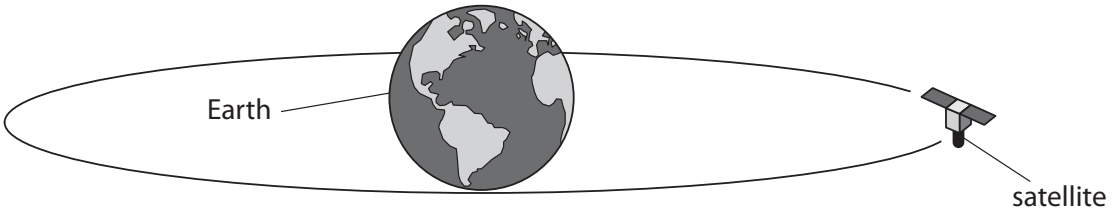

Figure 6

(i) State the name of the force that keeps the satellite in orbit around the Earth.

(1)

.....

(ii) Draw an arrow on Figure 6 to show the direction of the force acting on the satellite, that keeps the satellite in orbit around the Earth.

Label this arrow 'F'.

(1)

DO NOT WRITE IN THIS AREA
DO NOT WRITE IN THIS AREA
DO NOT WRITE IN THIS AREA
DO NOT WRITE IN THIS AREA
DO NOT WRITE IN THIS AREA
DO NOT WRITE IN THIS AREA

(c) Satellites are used to gather data about the origin of the Universe.

The Big Bang theory is a theory about the origin of the Universe.

Evidence for the Big Bang theory is provided by red-shift and CMB radiation.

(i) Describe what is meant by red-shift.

(2)

.....

.....

.....

.....

(ii) Explain how red-shift provides evidence for the Big Bang theory.

(2)

.....

.....

.....

.....

(iii) The Cosmic Background Explorer (COBE) satellite observed CMB radiation from 1989 to 1993.

State what the 'M' in CMB radiation stands for.

(1)

.....

(iv) State what is meant by 'cosmic background radiation'.

(1)

.....

.....

DO NOT WRITE IN THIS AREA
DO NOT WRITE IN THIS AREA
DO NOT WRITE IN THIS AREA
DO NOT WRITE IN THIS AREA
DO NOT WRITE IN THIS AREA
DO NOT WRITE IN THIS AREA

(v) Explain how the presence of CMB radiation provides evidence for the Big Bang theory.

(2)

.....

.....

.....

.....

(Total for Question 4 = 11 marks)

DO NOT WRITE IN THIS AREA
DO NOT WRITE IN THIS AREA
DO NOT WRITE IN THIS AREA
DO NOT WRITE IN THIS AREA
DO NOT WRITE IN THIS AREA
DO NOT WRITE IN THIS AREA

5 (a) Figure 7 shows a tuning fork.

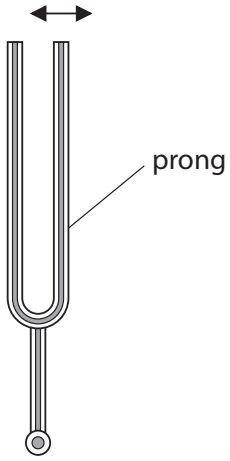

Figure 7

When the prongs of the tuning fork are struck, the prongs vibrate in the directions shown by the arrows on Figure 7.

Describe how the vibrating tuning fork causes a sound wave to travel through the air.

You may add to the diagram if it helps your answer.

(2)

.....

.....

.....

.....

DO NOT WRITE IN THIS AREA
DO NOT WRITE IN THIS AREA
DO NOT WRITE IN THIS AREA
DO NOT WRITE IN THIS AREA
DO NOT WRITE IN THIS AREA
DO NOT WRITE IN THIS AREA

(b) The following descriptions describe waves from different parts of the electromagnetic spectrum.

Complete each description by adding the name of the wave.

Use the name of each wave only once. Each description refers to a different part of the electromagnetic spectrum.

(4)

Description 1

used in cooking

used in short-range communication

typical wavelength 900 nm

name of wave .....

Description 2

used in cooking

used in communication

typical wavelength 150 mm

name of wave .....

Description 3

used in communication

produced by oscillations in electrical circuits

typical wavelength 150 m

name of wave .....

Description 4

used in medical scanning

is emitted by the nucleus of an atom

typical wavelength 2.0×10^{-3} nm

name of wave .....

DO NOT WRITE IN THIS AREA
DO NOT WRITE IN THIS AREA
DO NOT WRITE IN THIS AREA
DO NOT WRITE IN THIS AREA
DO NOT WRITE IN THIS AREA
DO NOT WRITE IN THIS AREA

(c) When white light crosses the boundary between air and glass, it can split up into the colours of the spectrum.

Explain, in terms of speed, why the light behaves like this.

(3)

.....

.....

.....

.....

.....

.....

.....

.....

(Total for Question 5 = 9 marks)

DO NOT WRITE IN THIS AREA
DO NOT WRITE IN THIS AREA
DO NOT WRITE IN THIS AREA
DO NOT WRITE IN THIS AREA
DO NOT WRITE IN THIS AREA
DO NOT WRITE IN THIS AREA

DO NOT WRITE IN THIS AREA
DO NOT WRITE IN THIS AREA
DO NOT WRITE IN THIS AREA
DO NOT WRITE IN THIS AREA
DO NOT WRITE IN THIS AREA
DO NOT WRITE IN THIS AREA

BLANK PAGE

6 (a) The symbol '*g*' can be used to refer to the acceleration due to gravity.

The acceleration due to gravity '*g*' has the unit of m/s^2.

'*g*' can also have another unit.

Which of these is also a unit for *g*?

(1)

☒ **A** J/kg

☒ **B** J/kg^2

☒ **C** N/kg

☒ **D** N/kg^2

(b) Two students try to determine a value for *g*, the acceleration due to gravity.

(i) They measure the time, *t*, for a small steel ball to fall through a height, *h*, from rest.

They measure *t* to be 0.74 s, using a stopwatch.

They measure *h* to be 2.50 m, using a metre rule.

Calculate a value for *g* from the students' measurements.

Use the equation

$$g = \frac{2h}{t^2}$$

(2)

g = ... m/s^2

DO NOT WRITE IN THIS AREA
DO NOT WRITE IN THIS AREA
DO NOT WRITE IN THIS AREA
DO NOT WRITE IN THIS AREA
DO NOT WRITE IN THIS AREA
DO NOT WRITE IN THIS AREA

(ii) They record the time t for two more drops from the same height.

The three values for time t are

0.74 s, 0.69 s, 0.81 s.

Calculate the average value of time t to an appropriate number of significant figures.

(2)

average value of time t = ... s

(c) Explain **one** way the students could improve their procedure to obtain a more accurate value for g.

(2)

.....

.....

.....

.....

(d) A car travelling at 15 m/s comes to rest in a distance of 14 m when the brakes are applied.

Calculate the deceleration of the car.
Use an equation selected from the list of equations at the end of this paper.

(3)

deceleration = ... m/s^2

(Total for Question 6 = 10 marks)

DO NOT WRITE IN THIS AREA
DO NOT WRITE IN THIS AREA
DO NOT WRITE IN THIS AREA
DO NOT WRITE IN THIS AREA
DO NOT WRITE IN THIS AREA
DO NOT WRITE IN THIS AREA

7 (a) Which of these is a non-renewable source of energy?

(1)

☒ **A** geothermal

☒ **B** natural gas

☒ **C** tidal

☒ **D** solar

(b) Explain why renewable sources provide an increasing fraction of the electricity supply for many countries.

(2)

.....

.....

.....

.....

(c) Electricity can be generated using a water turbine.

(i) Water gains kinetic energy by falling from the top of a dam.

Calculate the minimum height that 7.0 kg of water must fall to gain 1300 J of kinetic energy.

(3)

minimum height = ... m

DO NOT WRITE IN THIS AREA
DO NOT WRITE IN THIS AREA
DO NOT WRITE IN THIS AREA
DO NOT WRITE IN THIS AREA
DO NOT WRITE IN THIS AREA
DO NOT WRITE IN THIS AREA

(ii) As water enters the turbine at the bottom of the dam, the kinetic energy of 8.0 kg of moving water is 1100 J.

Calculate the speed of the moving water as it enters the turbine.

(3)

speed = ... m/s

DO NOT WRITE IN THIS AREA
DO NOT WRITE IN THIS AREA
DO NOT WRITE IN THIS AREA
DO NOT WRITE IN THIS AREA
DO NOT WRITE IN THIS AREA
DO NOT WRITE IN THIS AREA

(d) Moving air can be used to generate electricity using a wind turbine.

Figure 8 is a graph of kinetic energy against wind speed for a mass of moving air.

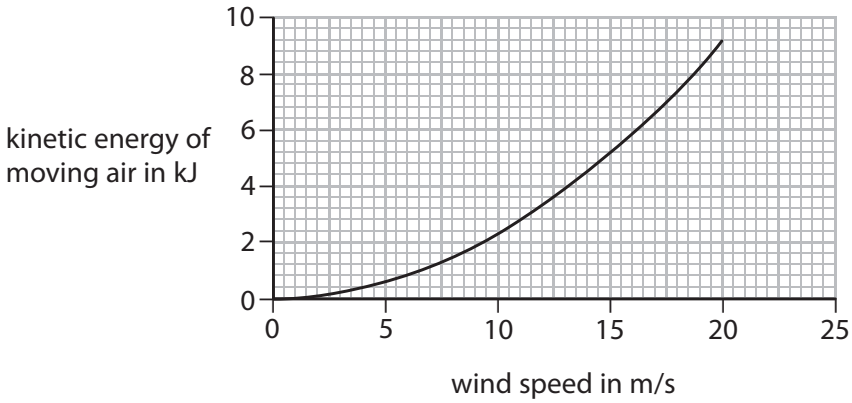

Figure 8

Just before the air reaches a wind turbine it has a wind speed of 15 m/s.

When the air has gone through the turbine it has a wind speed of 13 m/s.

As the air moves through the turbine some of its kinetic energy is transferred to the turbine.

Use the graph to determine the percentage of the kinetic energy transferred to the turbine from the air.

(3)

percentage of kinetic energy transferred from the air = ... %

(Total for Question 7 = 12 marks)

DO NOT WRITE IN THIS AREA
DO NOT WRITE IN THIS AREA
DO NOT WRITE IN THIS AREA
DO NOT WRITE IN THIS AREA
DO NOT WRITE IN THIS AREA
DO NOT WRITE IN THIS AREA

8 (a) A student investigates how different surfaces radiate energy as they cool.

Figure 9 shows some of the apparatus used in a part of the investigation.

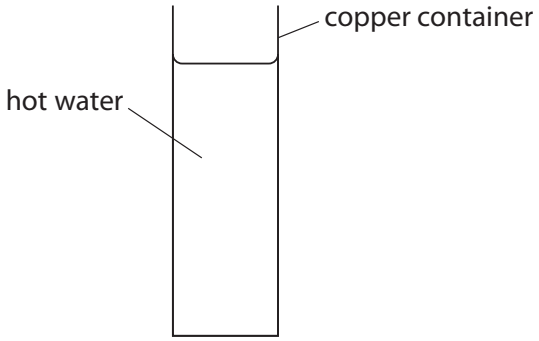

Figure 9

Describe how the student could collect data to show how the rate of cooling of the container and water change with time.

(2)

.....

.....

.....

.....

DO NOT WRITE IN THIS AREA
DO NOT WRITE IN THIS AREA
DO NOT WRITE IN THIS AREA
DO NOT WRITE IN THIS AREA
DO NOT WRITE IN THIS AREA
DO NOT WRITE IN THIS AREA

(b) Figure 10 is a graph of intensity against wavelength for the electromagnetic radiation emitted by a halogen lamp.

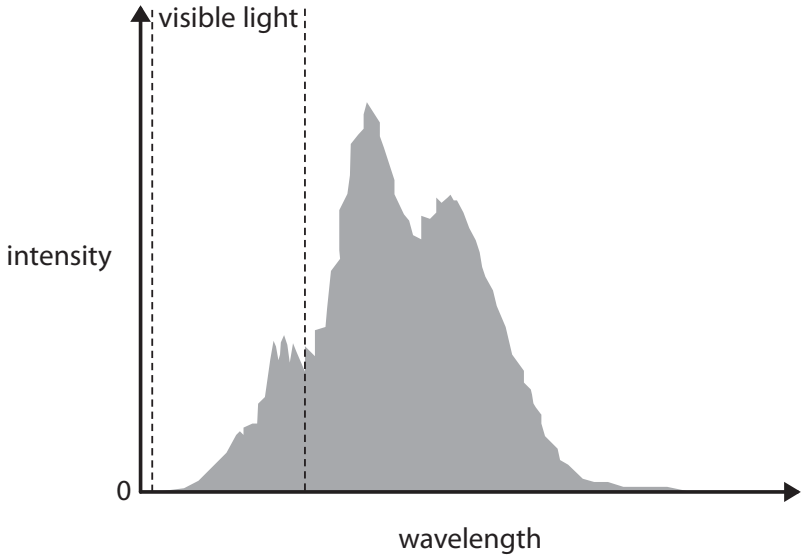

Figure 10

Describe how the intensity of the radiation varies with wavelength in Figure 10.

(2)

.....

.....

.....

.....

.....

DO NOT WRITE IN THIS AREA
DO NOT WRITE IN THIS AREA
DO NOT WRITE IN THIS AREA
DO NOT WRITE IN THIS AREA
DO NOT WRITE IN THIS AREA
DO NOT WRITE IN THIS AREA

(c) Figure 11 is a graph of temperature against time for a halogen lamp for the first 120 ms after it has been switched on.

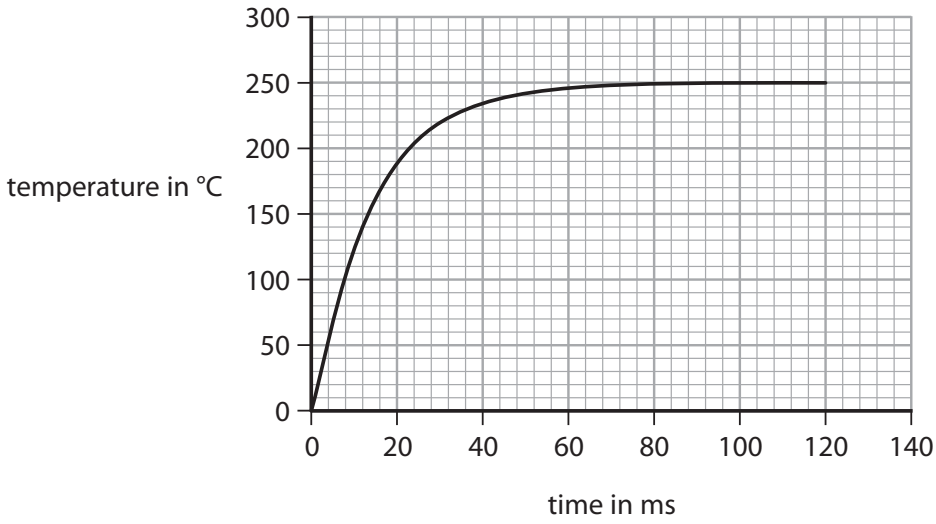

Figure 11

(i) Calculate the gradient of the graph at a time of 30 ms.

State the unit.

(4)

gradient = ... unit .....

(ii) Explain why the temperature of the lamp rises and then remains at a constant value.

(3)

.....

.....

.....

.....

.....

.....

(Total for Question 8 = 11 marks)

DO NOT WRITE IN THIS AREA
DO NOT WRITE IN THIS AREA
DO NOT WRITE IN THIS AREA
DO NOT WRITE IN THIS AREA
DO NOT WRITE IN THIS AREA
DO NOT WRITE IN THIS AREA

9 (a) A student investigates the relationship between force and acceleration for a trolley on a runway.

Figure 12 shows some of the apparatus the student uses.

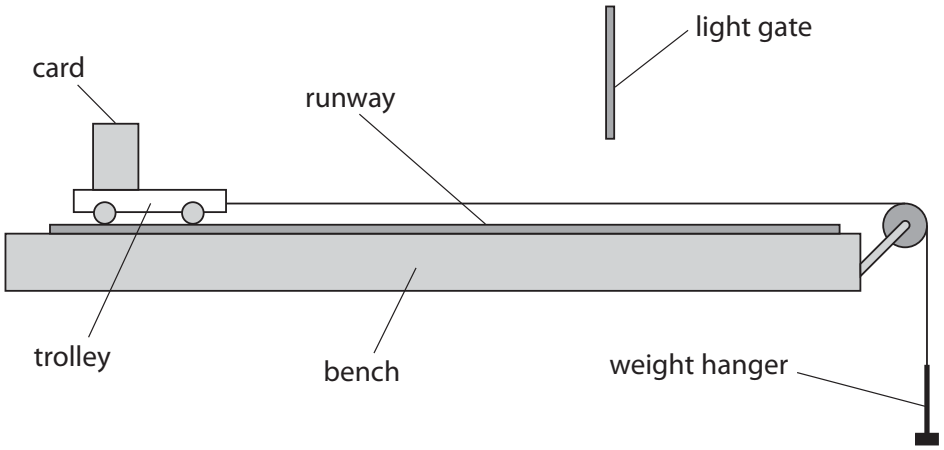

Figure 12

(i) Describe how the student could increase the accelerating force applied to the trolley.

(2)

.....

.....

.....

.....

(ii) Describe how the mass of the moving system can be kept constant.

(2)

.....

.....

.....

.....

DO NOT WRITE IN THIS AREA
DO NOT WRITE IN THIS AREA
DO NOT WRITE IN THIS AREA
DO NOT WRITE IN THIS AREA
DO NOT WRITE IN THIS AREA
DO NOT WRITE IN THIS AREA

(iii) Explain how the student could improve the procedure to compensate for the effects of frictional forces acting on the trolley.

(2)

.....

.....

.....

.....

DO NOT WRITE IN THIS AREA
DO NOT WRITE IN THIS AREA
DO NOT WRITE IN THIS AREA
DO NOT WRITE IN THIS AREA
DO NOT WRITE IN THIS AREA
DO NOT WRITE IN THIS AREA

*(b) Figure 13 shows two objects, Q and R, before and after they collide.

Figure 13

The arrows show the direction of movement of the objects.
The arrows are not to scale.

Explain how momentum is conserved in the collision.

Use Newton's third law and Newton's second law in your answer.

Newton's second law can be written as

$$\text{force} = \frac{\text{change in momentum}}{\text{time}}$$

(6)

.....

.....

.....

.....

.....

.....

.....

.....

.....

.....

.....

.....

(Total for Question 9 = 12 marks)

DO NOT WRITE IN THIS AREA
DO NOT WRITE IN THIS AREA
DO NOT WRITE IN THIS AREA
DO NOT WRITE IN THIS AREA
DO NOT WRITE IN THIS AREA
DO NOT WRITE IN THIS AREA

10 Fusion and fission are nuclear reactions in which large amounts of energy are released.

(a) (i) In a fusion reaction, two hydrogen nuclei are forced together to form a helium nucleus.

Explain why a very high temperature is needed for this reaction to happen.

(3)

.....

.....

.....

.....

.....

.....

(ii) In a fusion reaction, the combined mass of the two small nuclei is greater than the mass of the resulting nucleus.

This decrease in mass, m, appears as energy, E, according to the equation.

$$E = mc^2$$

c is the speed of light $= 3.0 \times 10^8$ m/s.

The energy released in one fusion reaction is 4.5×10^{-12} J.

Calculate the decrease in mass.

(3)

decrease in mass = ... kg

DO NOT WRITE IN THIS AREA
DO NOT WRITE IN THIS AREA
DO NOT WRITE IN THIS AREA
DO NOT WRITE IN THIS AREA
DO NOT WRITE IN THIS AREA
DO NOT WRITE IN THIS AREA

*(b) Nuclear fission is used in nuclear reactors in some power stations.

In the reactor, a fission chain reaction is maintained and controlled to produce a supply of energy to generate electricity.

Figure 14 is a diagram of a nuclear reactor.

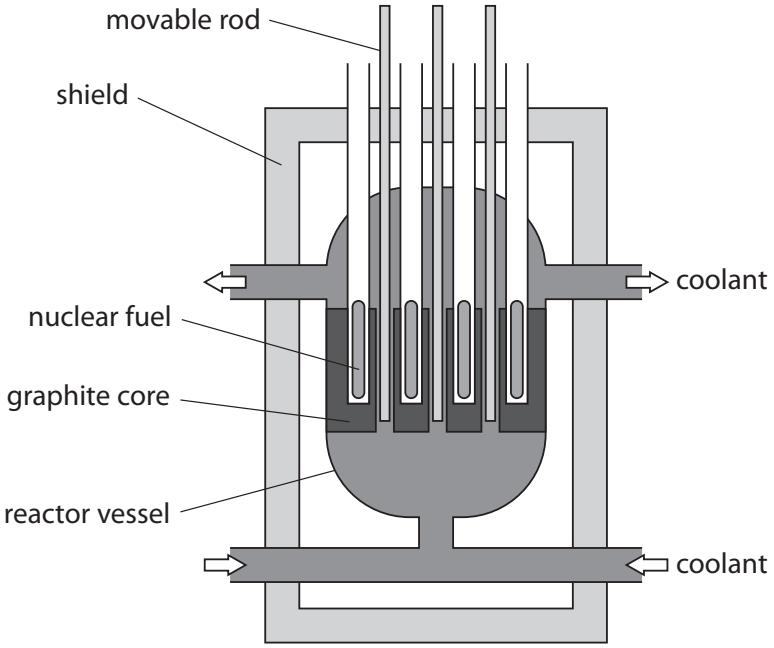

Figure 14

DO NOT WRITE IN THIS AREA
DO NOT WRITE IN THIS AREA
DO NOT WRITE IN THIS AREA
DO NOT WRITE IN THIS AREA
DO NOT WRITE IN THIS AREA
DO NOT WRITE IN THIS AREA

Explain how the graphite core and the movable rods are used to maintain and control the chain reaction.

(6)

.....

.....

.....

.....

.....

.....

.....

.....

.....

.....

.....

.....

.....

.....

.....

.....

(Total for Question 10 = 12 marks)

TOTAL FOR PAPER = 100 MARKS

DO NOT WRITE IN THIS AREA
DO NOT WRITE IN THIS AREA
DO NOT WRITE IN THIS AREA
DO NOT WRITE IN THIS AREA
DO NOT WRITE IN THIS AREA
DO NOT WRITE IN THIS AREA

Equations

(final velocity)^2 – (initial velocity)^2 = 2 × acceleration × distance $v^2 - u^2 = 2 \times a \times x$
force = change in momentum ÷ time $F = \frac{(mv - mu)}{t}$
energy transferred = current × potential difference × time $E = I \times V \times t$
force on a conductor at right angles to a magnetic field carrying a current = magnetic flux density × current × length $F = B \times I \times l$
$\frac{\text{voltage across primary coil}}{\text{voltage across secondary coil}} = \frac{\text{number of turns in primary coil}}{\text{number of turns in secondary coil}}$ $\frac{V_p}{V_s} = \frac{N_p}{N_s}$
potential difference across primary coil × current in primary coil = potential difference across secondary coil × current in secondary coil $V_p \times I_p = V_s \times I_s$
change in thermal energy = mass × specific heat capacity × change in temperature $\Delta Q = m \times c \times \Delta\theta$
thermal energy for a change of state = mass × specific latent heat $Q = m \times L$
$P_1 V_1 = P_2 V_2$ to calculate pressure or volume for gases of fixed mass at constant temperature
energy transferred in stretching = 0.5 × spring constant × (extension)^2 $E = ½ \times k \times x^2$
pressure due to a column of liquid = height of column × density of liquid × gravitational field strength $P = h \times \rho \times g$

DO NOT WRITE IN THIS AREA
DO NOT WRITE IN THIS AREA
DO NOT WRITE IN THIS AREA